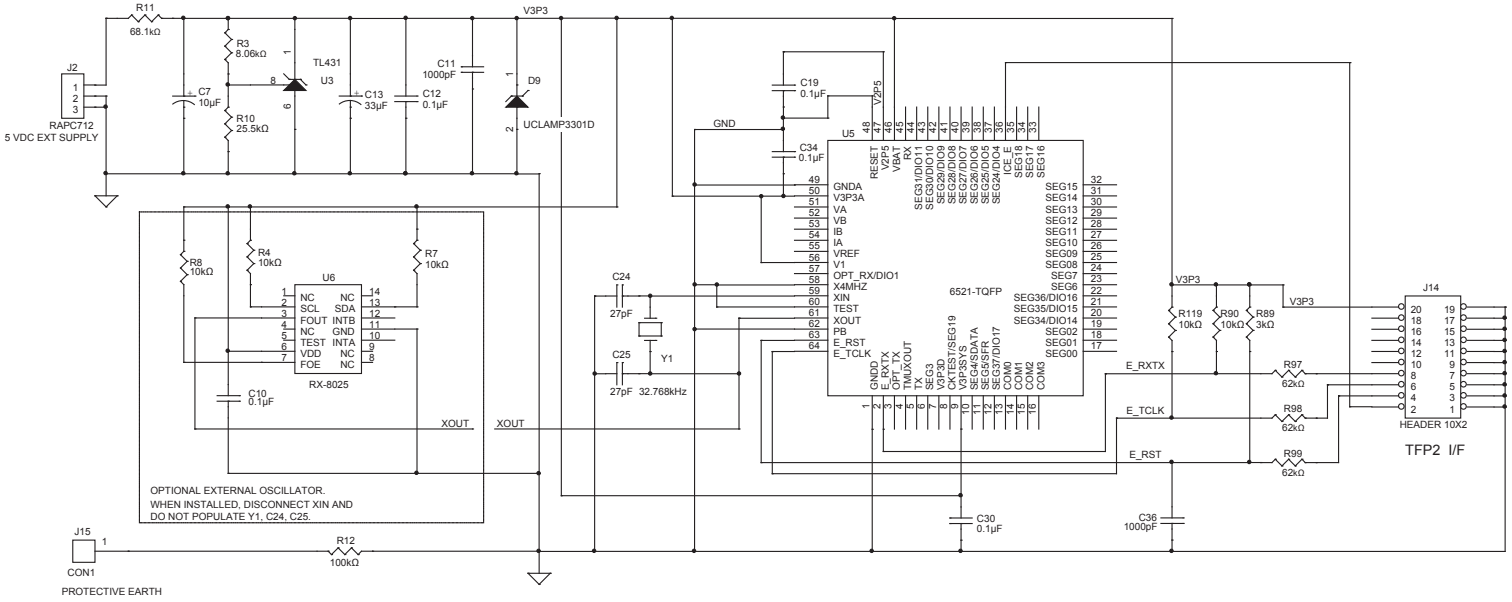
R11
68.1kΩ
V3P3
J2
RAPC712
5 VDC EXT SUPPLY
R3
8.06kΩ
C7
10µF
R10
25.5kΩ
TL431
U3
C13
33µF
C11
1000pF
C12
0.1µF
D9
UCLAMP3301D
C19
0.1µF
C34
0.1µF
GND
U5
6521-TQFP
R8
10kΩ
R4
10kΩ
R7
10kΩ
U6
RX-8025
C10
0.1µF
C24
27pF
C25
27pF
Y1
32.768kHz
XOUT
OPTIONAL EXTERNAL OSCILLATOR.
WHEN INSTALLED, DISCONNECT XIN AND
DO NOT POPULATE Y1, C24, C25.
J15
CON1
PROTECTIVE EARTH
R12
100kΩ
C30
0.1µF
C36
1000pF
R119
10kΩ
R90
10kΩ
R89
3kΩ
E_RXTX
E_TCLK
E_RST
R97
62kΩ
R98
62kΩ
R99
62kΩ
J14
HEADER 10X2
TFP2 I/F