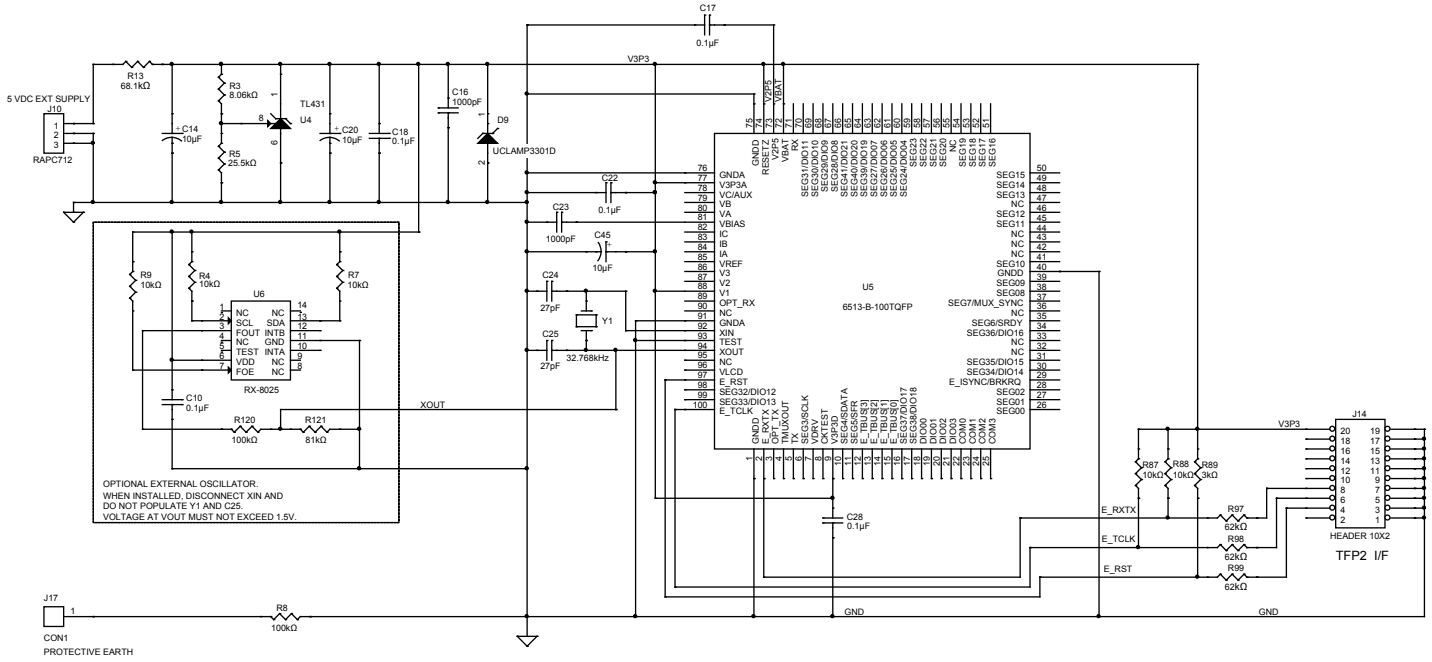
5 VDC EXT SUPPLY
J10
RAPC712
R13
68.1kΩ
R3
8.06kΩ
R5
25.5kΩ
TL431
U4
C14
10µF
C20
10µF
C18
0.1µF
C16
1000pF
D9
UCLAMP3301D
C17
0.1µF
V3P3
C22
0.1µF
C23
1000pF
C45
10µF
C24
27pF
C25
27pF
Y1
32.768kHz
U5
6513-B-100TQFP
U6
RX-8025
R9
10kΩ
R4
10kΩ
R7
10kΩ
C10
0.1µF
R120
100kΩ
R121
81kΩ
XOUT
OPTIONAL EXTERNAL OSCILLATOR.
WHEN INSTALLED, DISCONNECT XIN AND
DO NOT POPULATE Y1 AND C25.
VOLTAGE AT VOUT MUST NOT EXCEED 1.5V.
C28
0.1µF
R87
10kΩ
R88
10kΩ
R89
3kΩ
E_RXTX
E_TCLK
E_RST
R97
62kΩ
R98
62kΩ
R99
62kΩ
J14
HEADER 10X2
TFP2 I/F
J17
CON1
PROTECTIVE EARTH
R8
100kΩ
GND