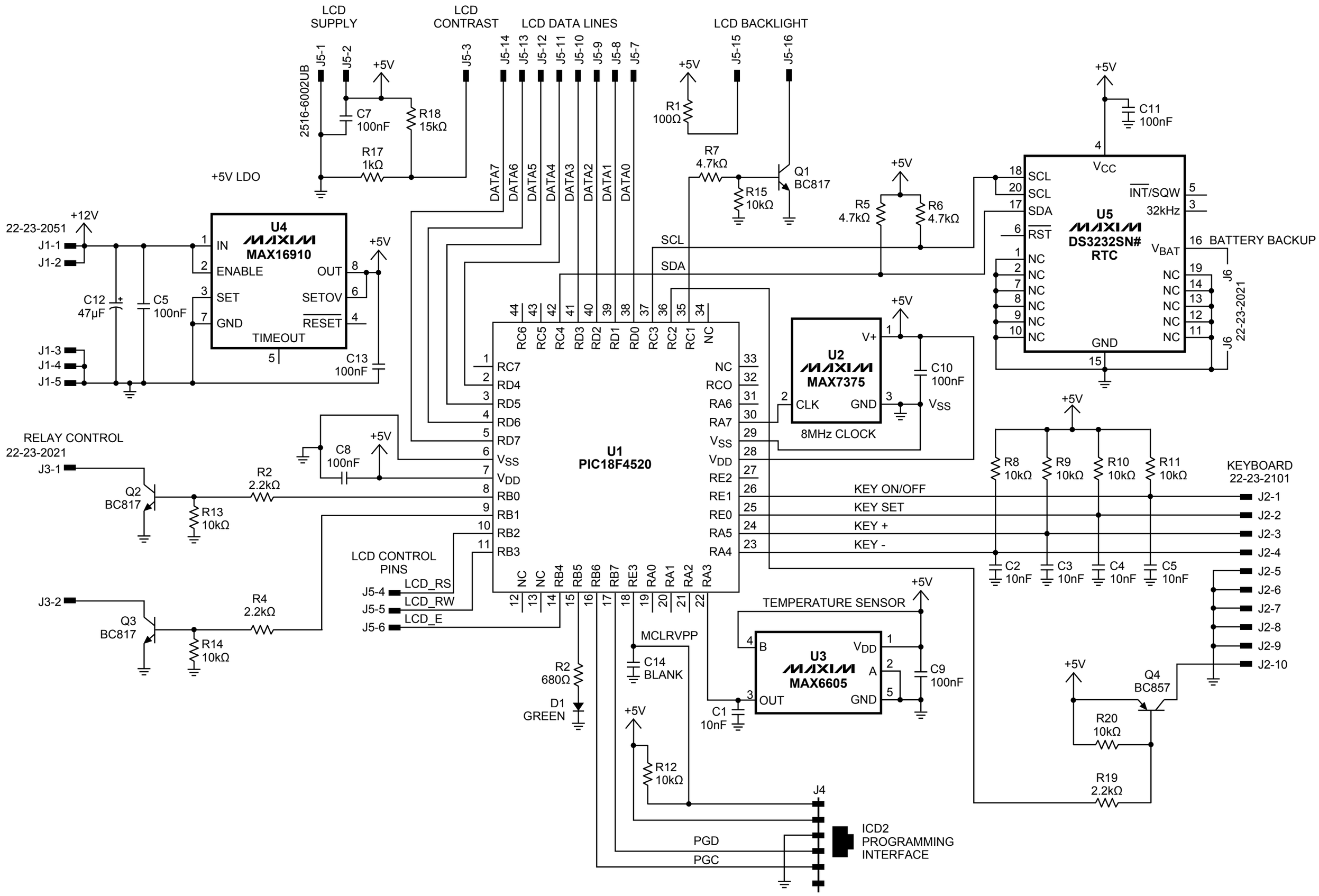
LCD SUPPLY
LCD CONTRAST
LCD DATA LINES
LCD BACKLIGHT
2516-6002UB
J5-1
J5-2
J5-3
J5-14
J5-13
J5-12
J5-11
J5-10
J5-9
J5-8
J5-7
J5-15
J5-16
+5V
C7 100nF
R18 15kΩ
R17 1kΩ
R1 100Ω
R7 4.7kΩ
R15 10kΩ
Q1 BC817
R5 4.7kΩ
R6 4.7kΩ
C11 100nF
+5V LDO
+12V
22-23-2051
J1-1
J1-2
J1-3
J1-4
J1-5
U4
MAX16910
IN
ENABLE
SET
GND
OUT
SETOV
RESET
TIMEOUT
C12 47µF
C5 100nF
C13 100nF
DATA7
DATA6
DATA5
DATA4
DATA3
DATA2
DATA1
DATA0
SCL
SDA
U5
DS3232SN#
RTC
VCC
INT/SQW
32kHz
RST
VBAT
BATTERY BACKUP
GND
J6
22-23-2021
U1
PIC18F4520
RC7
RD4
RD5
RD6
RD7
VSS
VDD
RB0
RB1
RB2
RB3
RC6
RC5
RC4
RD3
RD2
RD1
RD0
RC3
RC2
RC1
NC
RCO
RA6
RA7
RE2
RE1
RE0
RA5
RA4
RB4
RB5
RB6
RB7
RE3
RA0
RA1
RA2
RA3
U2
MAX7375
V+
CLK
GND
8MHz CLOCK
C10 100nF
VSS
RELAY CONTROL
22-23-2021
J3-1
J3-2
Q2 BC817
Q3 BC817
R2 2.2kΩ
R4 2.2kΩ
R13 10kΩ
R14 10kΩ
C8 100nF
LCD CONTROL PINS
J5-4
J5-5
J5-6
LCD_RS
LCD_RW
LCD_E
R2 680Ω
D1 GREEN
MCLRVPP
C14 BLANK
R12 10kΩ
TEMPERATURE SENSOR
U3
MAX6605
B
OUT
VDD
A
GND
C1 10nF
C9 100nF
KEY ON/OFF
KEY SET
KEY +
KEY -
R8 10kΩ
R9 10kΩ
R10 10kΩ
R11 10kΩ
C2 10nF
C3 10nF
C4 10nF
C5 10nF
KEYBOARD
22-23-2101
J2-1
J2-2
J2-3
J2-4
J2-5
J2-6
J2-7
J2-8
J2-9
J2-10
Q4 BC857
R20 10kΩ
R19 2.2kΩ
J4
PGD
PGC
ICD2
PROGRAMMING
INTERFACE