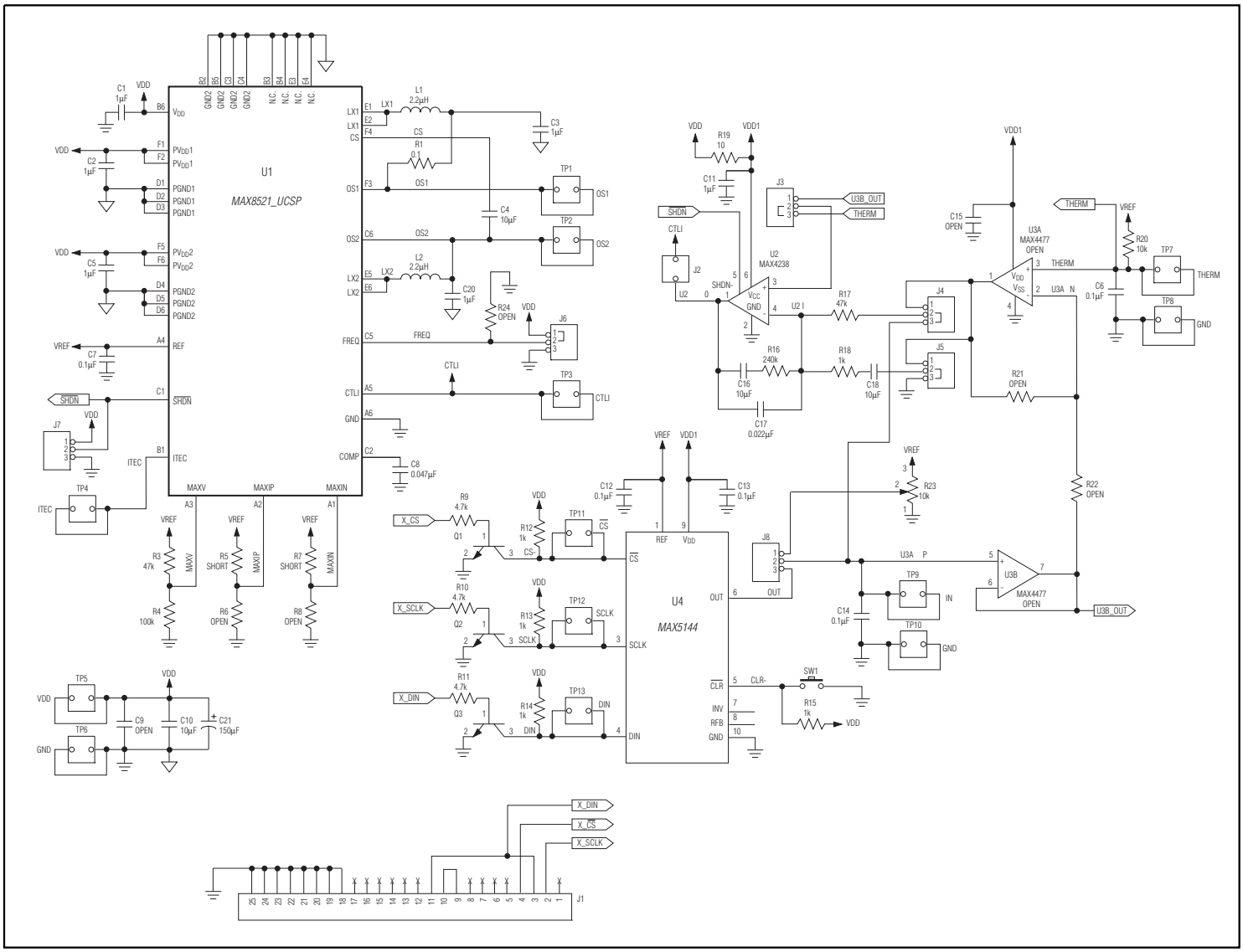
U1
MAX8521_UCSP
U2
MAX4238
U3A
MAX4477
OPEN
U3B
MAX4477
OPEN
U4
MAX5144
J1
J2
J3
J4
J5
J6
J7
J8
TP1
TP2
TP3
TP4
TP5
TP6
TP7
TP8
TP9
TP10
TP11
TP12
TP13
SW1
VDD
VDD1
VREF
SHDN
CTLI
THERM
U3B_OUT
X_CS
X_SCLK
X_DIN
GND
ITEC
OS1
OS2
FREQ
COMP
MAXV
MAXIP
MAXIN
L1
2.2µH
L2
2.2µH
C1
1µF
C2
1µF
C3
1µF
C4
10µF
C5
1µF
C6
0.1µF
C7
0.1µF
C8
0.047µF
C9
OPEN
C10
10µF
C11
1µF
C12
0.1µF
C13
0.1µF
C14
0.1µF
C15
OPEN
C16
10µF
C17
0.022µF
C18
10µF
C20
1µF
C21
150µF
R1
0.1
R3
47k
R4
100k
R5
SHORT
R6
OPEN
R7
SHORT
R8
OPEN
R9
4.7k
R10
4.7k
R11
4.7k
R12
1k
R13
1k
R14
1k
R15
1k
R16
240k
R17
47k
R18
1k
R19
10
R20
10k
R21
OPEN
R22
OPEN
R23
10k
R24
OPEN
Q1
Q2
Q3
CS
SCLK
DIN
OUT
IN
CLR
CLR-
INV
RFB
REF
VDD
VSS
VCC
SHDN-
U2 I
U3A N
U3A P