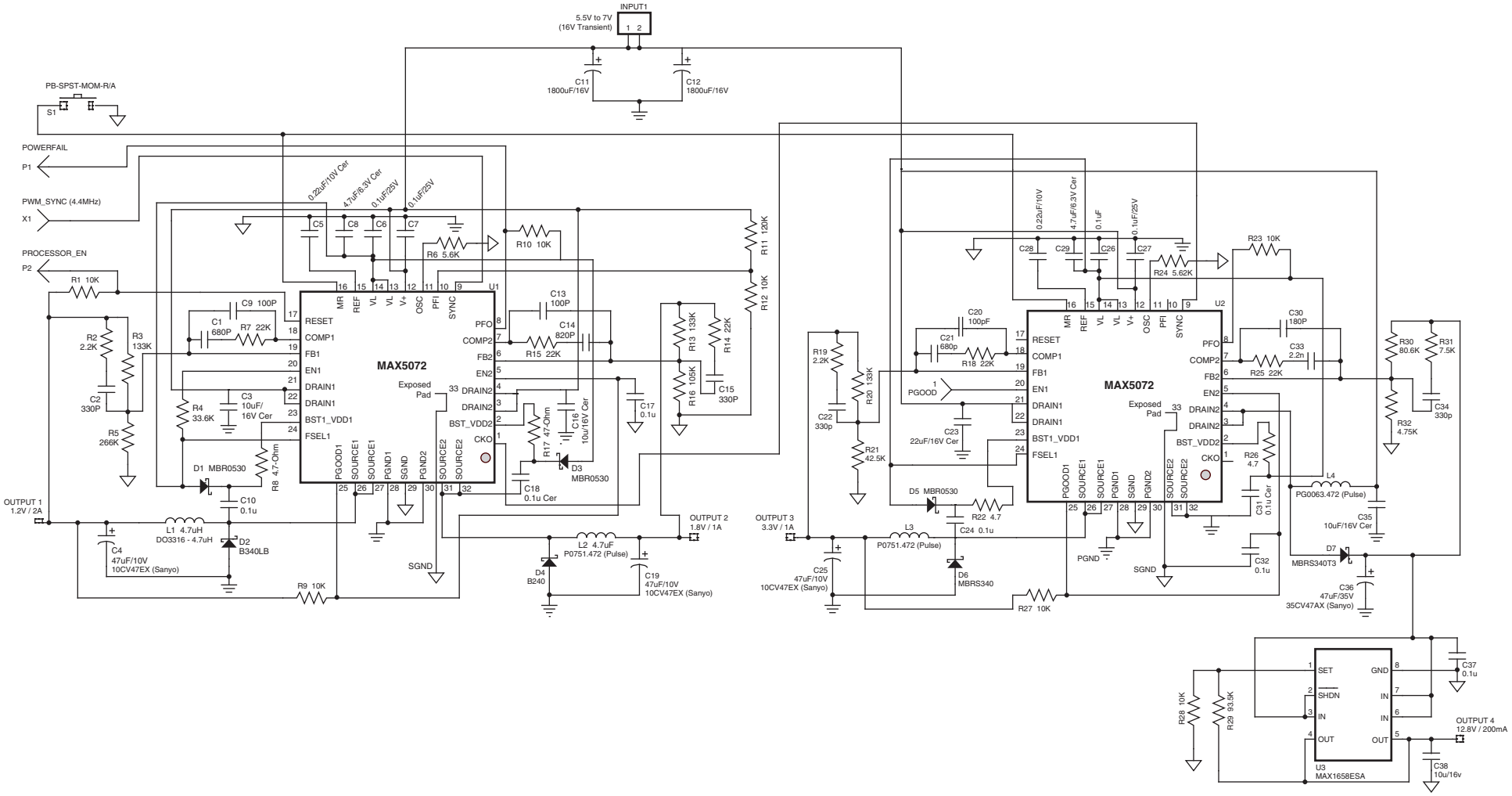
INPUT1
5.5V to 7V
(16V Transient)
C11
1800uF/16V
C12
1800uF/16V
PB-SPST-MOM-R/A
S1
POWERFAIL
P1
PWM_SYNC (4.4MHz)
X1
PROCESSOR_EN
P2
R1 10K
R2
2.2K
R3
133K
C2
330P
R5
266K
C9 100P
C1
680P
R7 22K
R4
33.6K
C3
10uF/
16V Cer
R8 4.7-Ohm
D1 MBR0530
C10
0.1u
OUTPUT 1
1.2V / 2A
C4
47uF/10V
10CV47EX (Sanyo)
L1 4.7uH
DO3316 - 4.7uH
D2
B340LB
R9 10K
0.22uF/10V Cer
4.7uF/6.3V Cer
0.1uF/25V
0.1uF/25V
C5
C8
C6
C7
R6 5.6K
R10 10K
R11 120K
R12 10K
MAX5072
U1
MR
REF
VL
VL
V+
OSC
PFI
SYNC
RESET
COMP1
FB1
EN1
DRAIN1
DRAIN1
BST1_VDD1
FSEL1
PFO
COMP2
FB2
EN2
DRAIN2
DRAIN2
BST_VDD2
CKO
Exposed
Pad
33
PGOOD1
SOURCE1
SOURCE1
PGND1
SGND
PGND2
SOURCE2
SOURCE2
SGND
C13
100P
C14
820P
R15 22K
R13 133K
R14 22K
R16 105K
C15
330P
C17
0.1u
R17 47-Ohm
C16
10u/16V Cer
D3
MBR0530
C18
0.1u Cer
L2 4.7uF
P0751.472 (Pulse)
D4
B240
C19
47uF/10V
10CV47EX (Sanyo)
OUTPUT 2
1.8V / 1A
0.22uF/10V
4.7uF/6.3V Cer
0.1uF
0.1uF/25V
C28
C29
C26
C27
R24 5.62K
R23 10K
C20
100pF
C21
680p
R18 22K
PGOOD
C23
22uF/16V Cer
R19
2.2K
R20 133K
C22
330p
R21
42.5K
D5 MBR0530
R22 4.7
C24 0.1u
L3
P0751.472 (Pulse)
D6
MBRS340
OUTPUT 3
3.3V / 1A
C25
47uF/10V
10CV47EX (Sanyo)
R27 10K
MAX5072
U2
C30
180P
C33
2.2n
R25 22K
R26
4.7
C31
0.1u Cer
C32
0.1u
L4
PG0063.472 (Pulse)
C35
10uF/16V Cer
D7
MBRS340T3
C36
47uF/35V
35CV47AX (Sanyo)
R30
80.6K
R31
7.5K
C34
330p
R32
4.75K
SET
SHDN
IN
OUT
GND
IN
IN
OUT
U3
MAX1658ESA
C37
0.1u
R28 10K
R29 93.5K
OUTPUT 4
12.8V / 200mA
C38
10u/16v