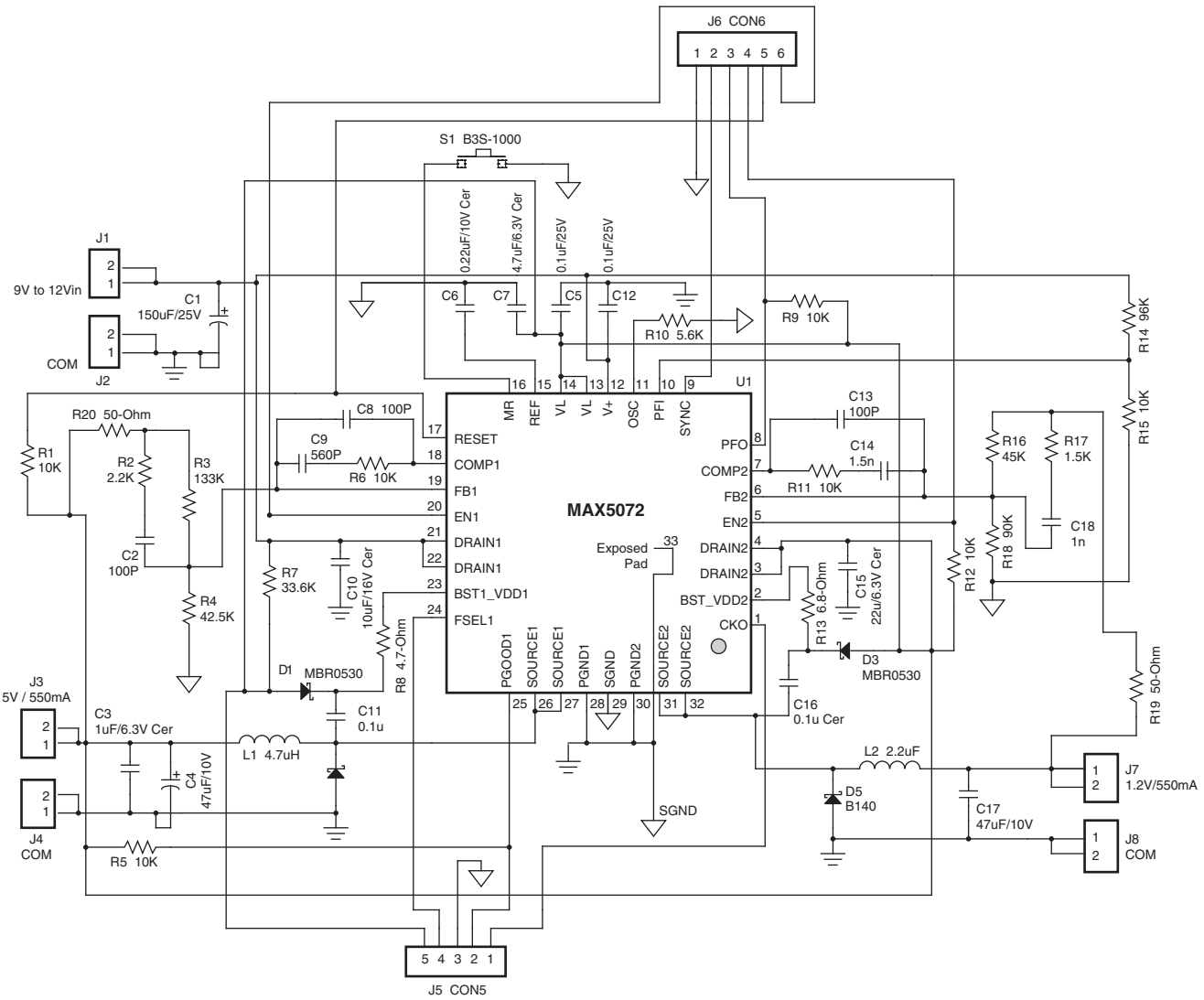
J6 CON6
1 2 3 4 5 6
S1 B3S-1000
0.22uF/10V Cer
4.7uF/6.3V Cer
0.1uF/25V
0.1uF/25V
J1
9V to 12Vin
C1
150uF/25V
COM
J2
C6
C7
C5
C12
R10 5.6K
R9 10K
R14 96K
R15 10K
U1
MR
REF
VL
VL
V+
OSC
PFI
SYNC
RESET
COMP1
FB1
EN1
DRAIN1
DRAIN1
BST1_VDD1
FSEL1
PGOOD1
SOURCE1
SOURCE1
PGND1
SGND
PGND2
SOURCE2
SOURCE2
PFO
COMP2
FB2
EN2
DRAIN2
DRAIN2
BST_VDD2
CKO
MAX5072
Exposed Pad
33
SGND
C13
100P
C14
1.5n
R11 10K
R16
45K
R17
1.5K
R18 90K
C18
1n
R12 10K
R20 50-Ohm
R1
10K
R2
2.2K
R3
133K
C2
100P
R4
42.5K
C8 100P
C9
560P
R6 10K
R7
33.6K
C10
10uF/16V Cer
R8 4.7-Ohm
D1
MBR0530
C11
0.1u
R13 6.8-Ohm
C15
22u/6.3V Cer
D3
MBR0530
C16
0.1u Cer
R19 50-Ohm
J3
5V / 550mA
C3
1uF/6.3V Cer
L1 4.7uH
C4
47uF/10V
J4
COM
R5 10K
L2 2.2uF
D5
B140
C17
47uF/10V
J7
1.2V/550mA
J8
COM
5 4 3 2 1
J5 CON5