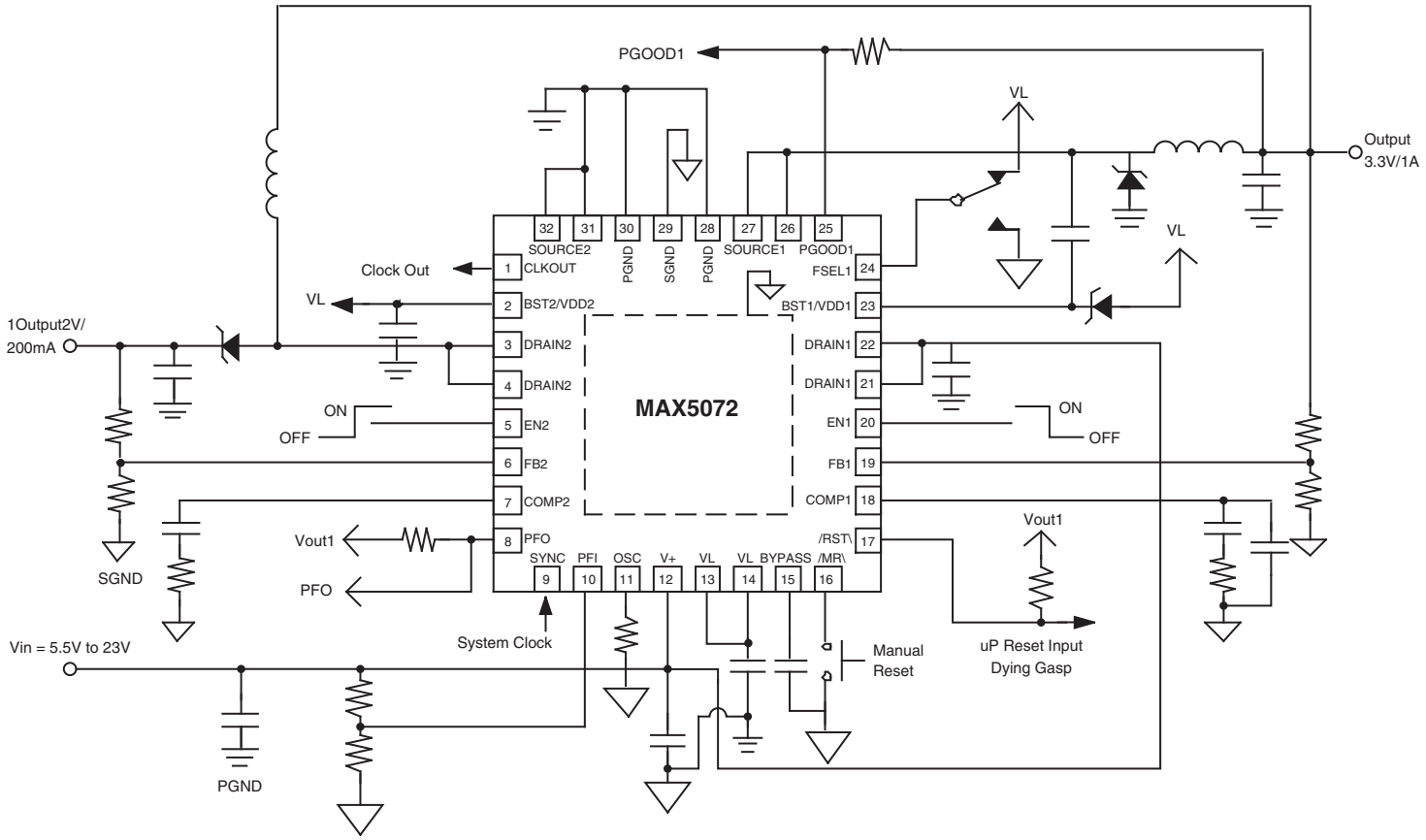
PGOOD1
VL
Output
3.3V/1A
32
31
30
29
28
27
26
25
SOURCE2
PGND
SGND
PGND
SOURCE1
PGOOD1
Clock Out
1
CLKOUT
FSEL1
24
VL
2
BST2/VDD2
BST1/VDD1
23
VL
1Output2V/
200mA
3
DRAIN2
DRAIN1
22
4
DRAIN2
DRAIN1
21
MAX5072
ON
OFF
5
EN2
EN1
20
ON
OFF
6
FB2
FB1
19
7
COMP2
COMP1
18
Vout1
8
PFO
/RST\
17
Vout1
SGND
PFO
SYNC
PFI
OSC
V+
VL
VL
BYPASS
/MR\
9
10
11
12
13
14
15
16
System Clock
Vin = 5.5V to 23V
Manual
Reset
uP Reset Input
Dying Gasp
PGND