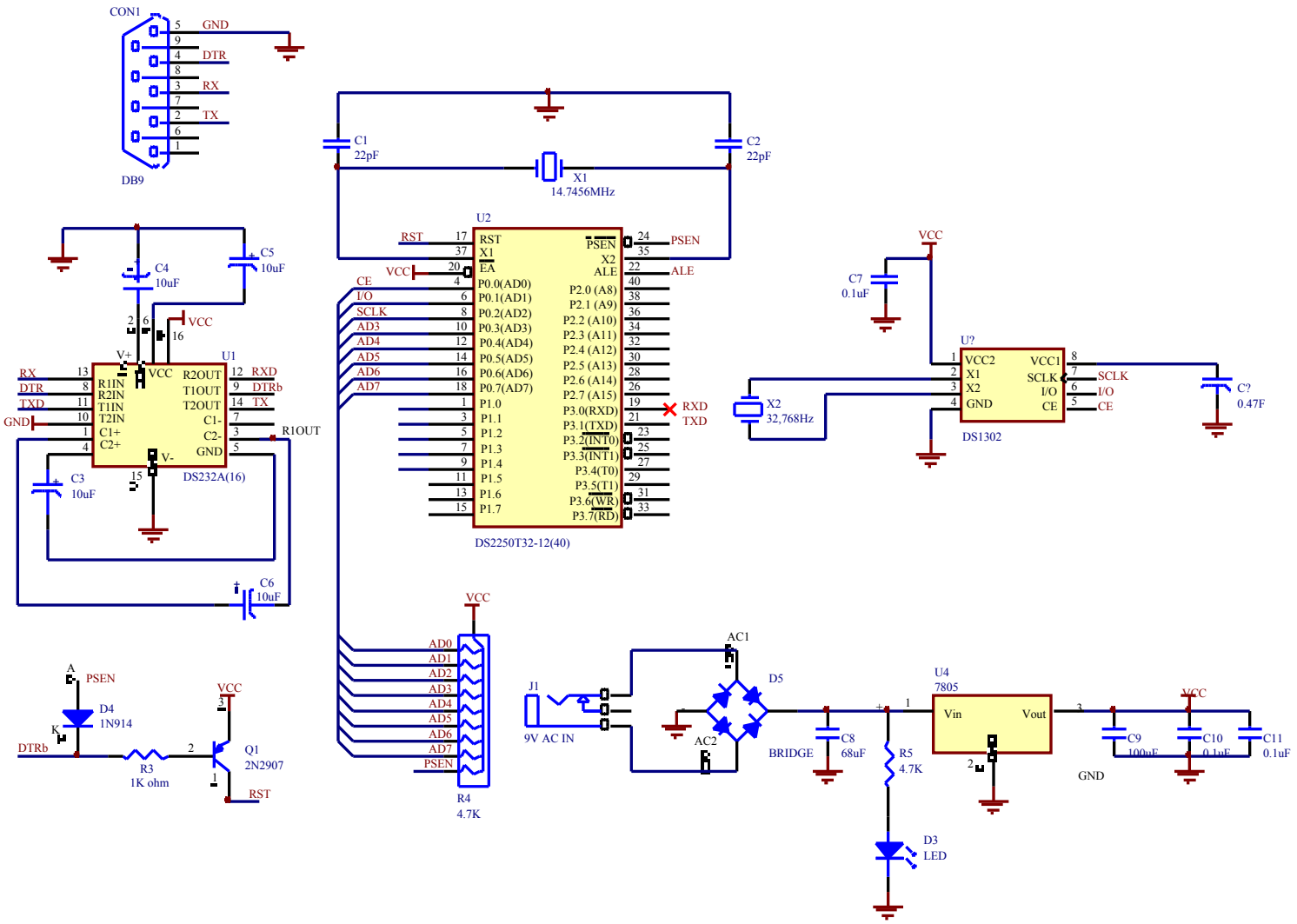
CON1
DB9
GND
DTR
RX
TX
C1
22pF
C2
22pF
X1
14.7456MHz
U2
DS2250T32-12(40)
RST
PSEN
ALE
CE
I/O
SCLK
AD3
AD4
AD5
AD6
AD7
RXD
TXD
C4
10uF
C5
10uF
VCC
U1
DS232A(16)
RX
DTR
TXD
GND
R1OUT
RXD
DTRb
TX
C3
10uF
C6
10uF
C7
0.1uF
U?
DS1302
X2
32,768Hz
C?
0.47F
AD0
AD1
AD2
AD3
AD4
AD5
AD6
AD7
PSEN
R4
4.7K
D4
1N914
DTRb
R3
1K ohm
Q1
2N2907
RST
J1
9V AC IN
AC1
AC2
D5
BRIDGE
C8
68uF
R5
4.7K
D3
LED
U4
7805
Vin
Vout
GND
C9
100uF
C10
0.1uF
C11
0.1uF