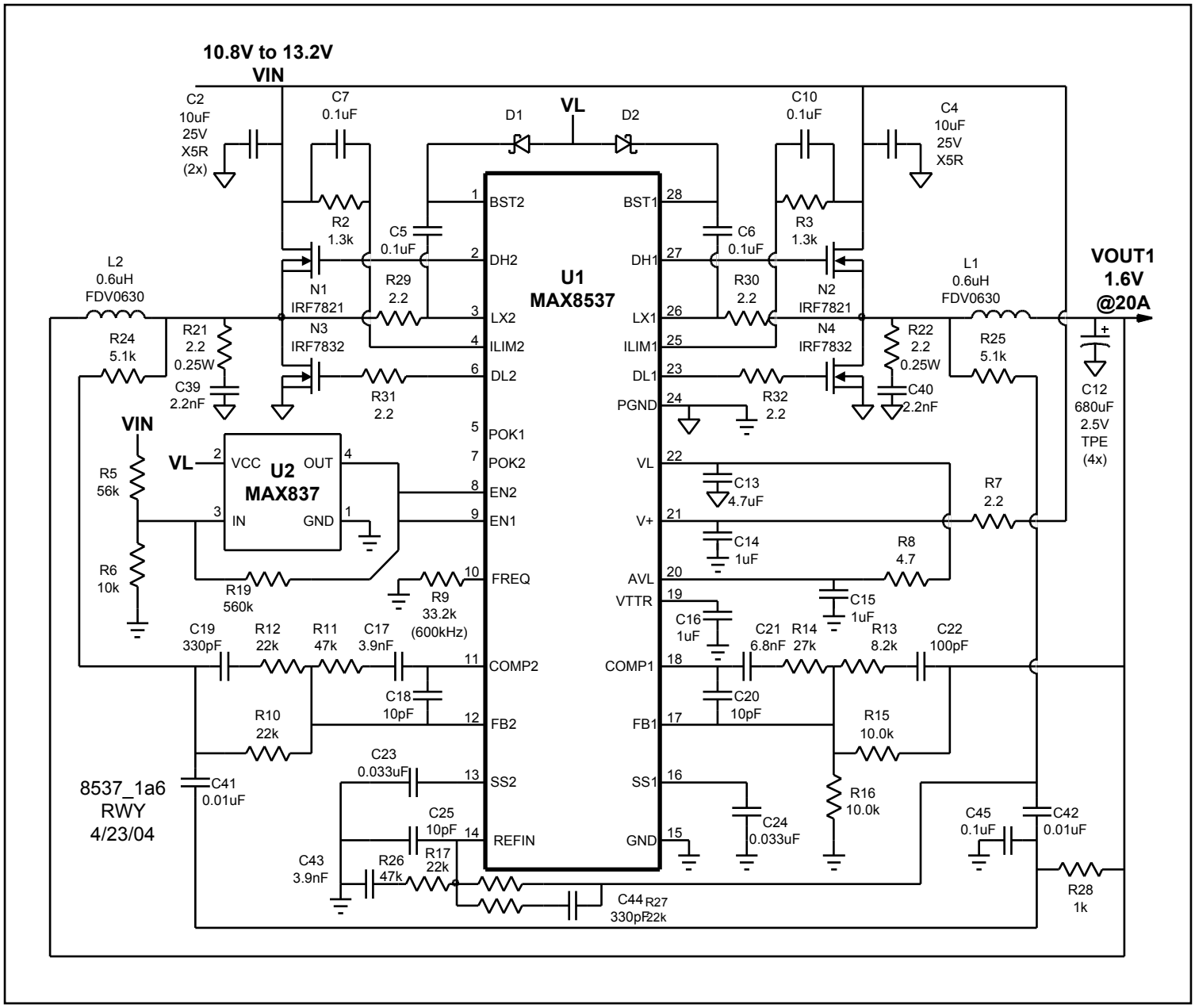
10.8V to 13.2V
VIN
C2
10uF
25V
X5R
(2x)
C7
0.1uF
D1
VL
D2
C10
0.1uF
C4
10uF
25V
X5R
R2
1.3k
C5
0.1uF
C6
0.1uF
R3
1.3k
L2
0.6uH
FDV0630
N1
IRF7821
R29
2.2
U1
MAX8537
R30
2.2
N2
IRF7821
L1
0.6uH
FDV0630
VOUT1
1.6V
@20A
R24
5.1k
R21
2.2
0.25W
N3
IRF7832
N4
IRF7832
R22
2.2
0.25W
R25
5.1k
C39
2.2nF
R31
2.2
R32
2.2
C40
2.2nF
C12
680uF
2.5V
TPE
(4x)
VIN
VL
U2
MAX837
VCC
OUT
IN
GND
R5
56k
R6
10k
R19
560k
R9
33.2k
(600kHz)
C13
4.7uF
R7
2.2
C14
1uF
R8
4.7
C15
1uF
C16
1uF
C19
330pF
R12
22k
R11
47k
C17
3.9nF
C21
6.8nF
R14
27k
R13
8.2k
C22
100pF
C18
10pF
C20
10pF
R10
22k
R15
10.0k
C23
0.033uF
R16
10.0k
8537_1a6
RWY
4/23/04
C41
0.01uF
C25
10pF
C24
0.033uF
C45
0.1uF
C42
0.01uF
C43
3.9nF
R26
47k
R17
22k
C44
330pF
R27
22k
R28
1k
BST2
DH2
LX2
ILIM2
DL2
POK1
POK2
EN2
EN1
FREQ
COMP2
FB2
SS2
REFIN
BST1
DH1
LX1
ILIM1
DL1
PGND
VL
V+
AVL
VTTR
COMP1
FB1
SS1
GND