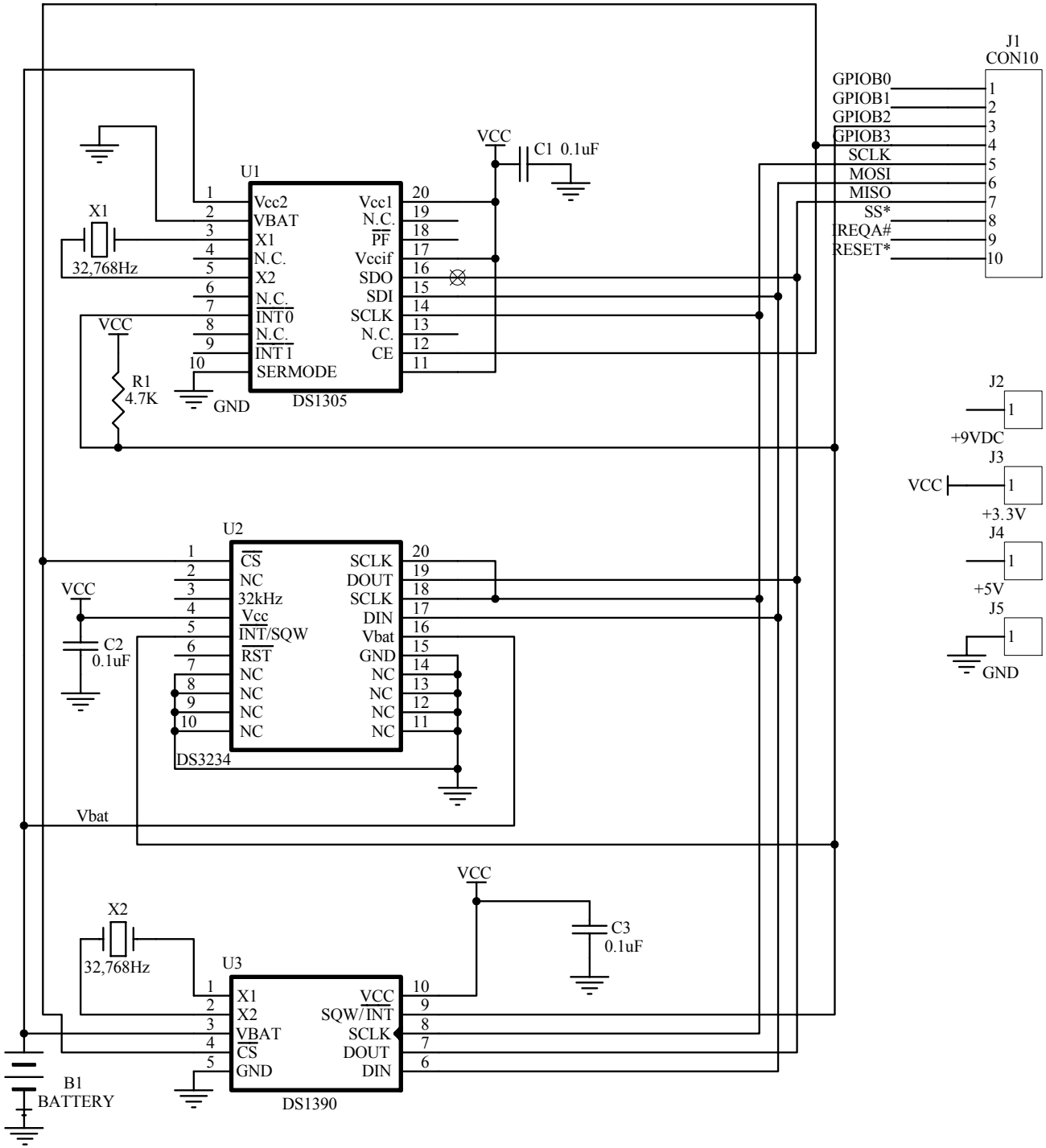
U1
DS1305
Vcc2
VBAT
X1
N.C.
X2
N.C.
INT0
N.C.
INT1
SERMODE
Vcc1
N.C.
PF
Vccif
SDO
SDI
SCLK
N.C.
CE
X1
32,768Hz
VCC
R1
4.7K
GND
VCC
C1 0.1uF
U2
DS3234
CS
NC
32kHz
Vcc
INT/SQW
RST
NC
SCLK
DOUT
SCLK
DIN
Vbat
GND
VCC
C2
0.1uF
Vbat
X2
32,768Hz
U3
DS1390
X1
X2
VBAT
CS
GND
VCC
SQW/INT
SCLK
DOUT
DIN
VCC
C3
0.1uF
B1
BATTERY
J1
CON10
GPIOB0
GPIOB1
GPIOB2
GPIOB3
SCLK
MOSI
MISO
SS*
IREQA#
RESET*
J2
+9VDC
J3
VCC
+3.3V
J4
+5V
J5
GND