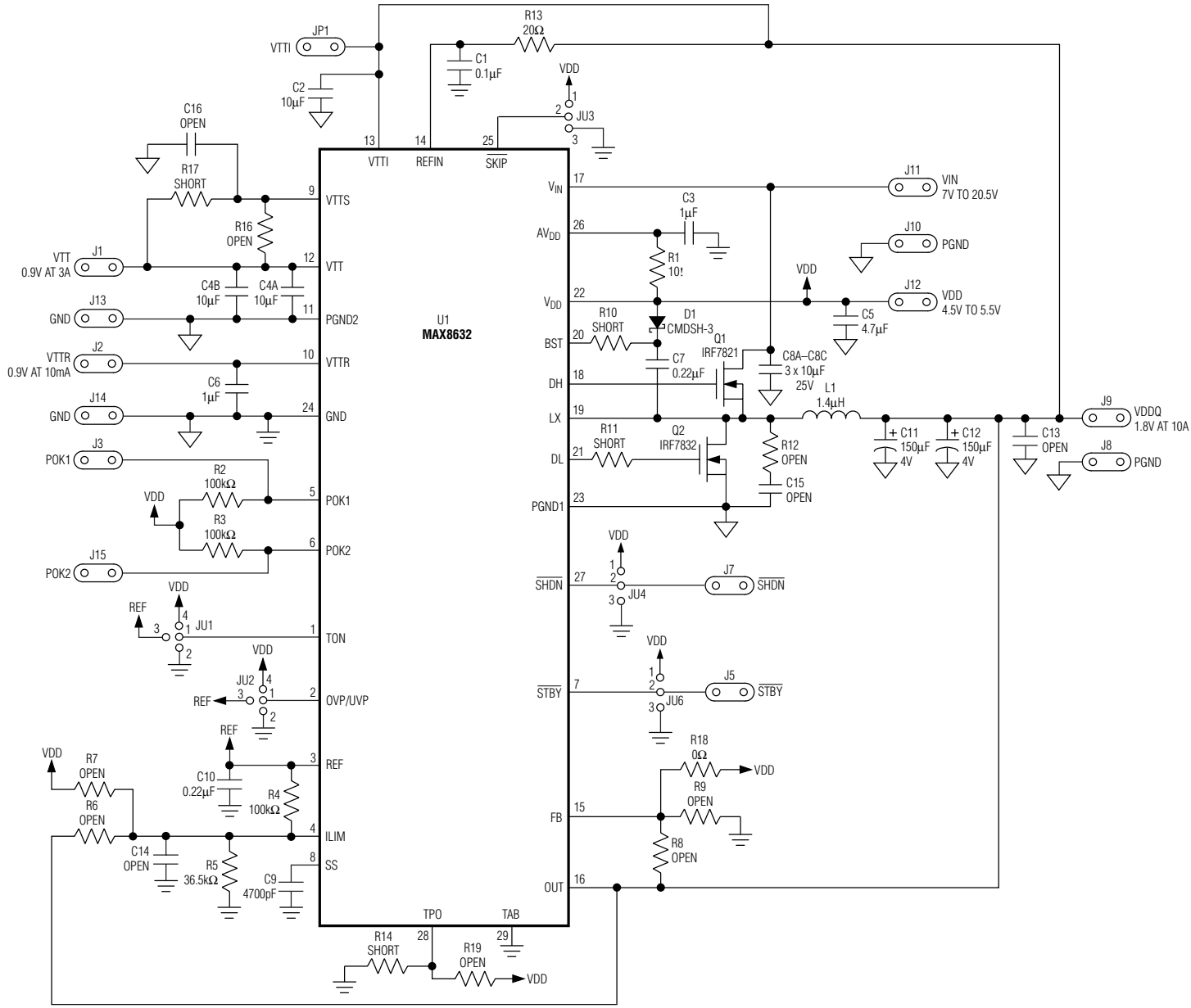
JP1
VTTI
C2
10µF
C1
0.1µF
R13
20Ω
VDD
JU3
C16
OPEN
R17
SHORT
R16
OPEN
VTT
0.9V AT 3A
J1
C4B
10µF
C4A
10µF
J13
GND
J2
VTTR
0.9V AT 10mA
C6
1µF
J14
GND
J3
POK1
R2
100kΩ
VDD
R3
100kΩ
J15
POK2
REF
JU1
JU2
REF
R7
OPEN
R6
OPEN
C10
0.22µF
R4
100kΩ
C14
OPEN
R5
36.5kΩ
C9
4700pF
U1
MAX8632
VTTI
REFIN
SKIP
VTTS
VTT
PGND2
VTTR
GND
POK1
POK2
TON
OVP/UVP
REF
ILIM
SS
TPO
TAB
VIN
AVDD
VDD
BST
DH
LX
DL
PGND1
SHDN
STBY
FB
OUT
J11
VIN
7V TO 20.5V
C3
1µF
R1
10!
J10
PGND
J12
VDD
4.5V TO 5.5V
C5
4.7µF
R10
SHORT
D1
CMDSH-3
C7
0.22µF
Q1
IRF7821
C8A–C8C
3 x 10µF
25V
L1
1.4µH
R11
SHORT
Q2
IRF7832
R12
OPEN
C15
OPEN
C11
150µF
4V
C12
150µF
4V
C13
OPEN
J9
VDDQ
1.8V AT 10A
J8
PGND
JU4
J7
SHDN
JU6
J5
STBY
R18
0Ω
R9
OPEN
R8
OPEN
R14
SHORT
R19
OPEN