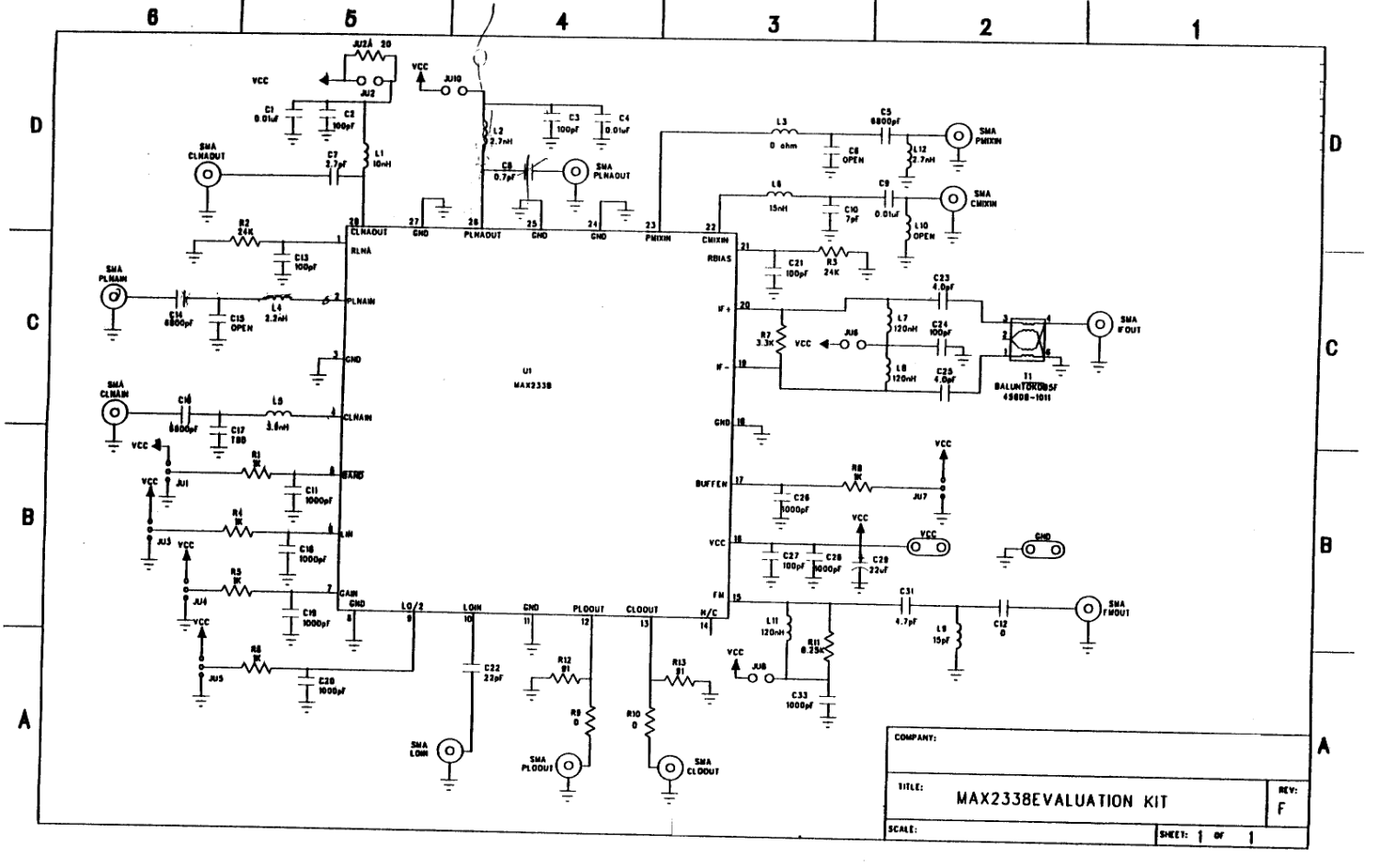

U1
MAX2338
CLNAOUT
RLNA
PLNAIN
GND
CLNAIN
BAND
LIN
GAIN
LO/2
LOIN
PLOOUT
CLOOUT
PLNAOUT
PMIXIN
CMIXIN
RBIAS
IF+
IF-
BUFFER
VCC
FM
N/C
SMA CLNAOUT
SMA PLNAIN
SMA CLNAIN
SMA PLNAOUT
SMA PMIXIN
SMA CMIXIN
SMA IFOUT
SMA FMOUT
SMA LOIN
SMA PLOOUT
SMA CLOOUT
T1
BALUNTOKOB5F
45808-1011
COMPANY:
TITLE:
MAX2338EVALUATION KIT
REV:
F
SCALE:
SHEET: 1 OF 1