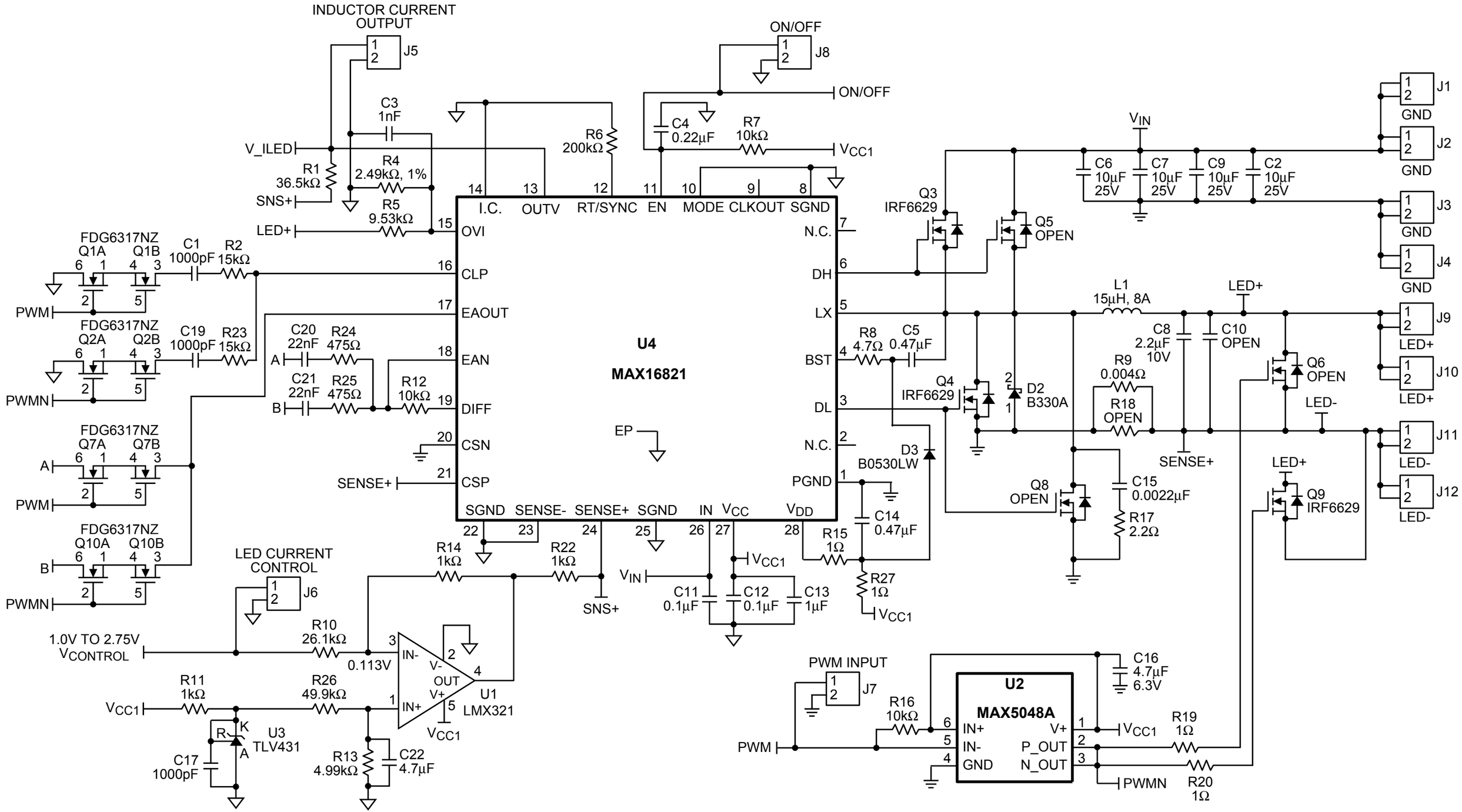
INDUCTOR CURRENT OUTPUT
J5
ON/OFF
J8
ON/OFF
C3 1nF
V_ILED
R1 36.5kΩ
R4 2.49kΩ, 1%
SNS+
R5 9.53kΩ
LED+
R6 200kΩ
C4 0.22µF
R7 10kΩ
VCC1
VIN
C6 10µF 25V
C7 10µF 25V
C9 10µF 25V
C2 10µF 25V
J1
J2
J3
J4
GND
Q3 IRF6629
Q5 OPEN
FDG6317NZ Q1A Q1B
C1 1000pF
R2 15kΩ
PWM
FDG6317NZ Q2A Q2B
C19 1000pF
R23 15kΩ
PWMN
C20 22nF
R24 475Ω
C21 22nF
R25 475Ω
R12 10kΩ
A
B
FDG6317NZ Q7A Q7B
FDG6317NZ Q10A Q10B
I.C.
OUTV
RT/SYNC
EN
MODE
CLKOUT
SGND
OVI
CLP
EAOUT
EAN
DIFF
CSN
CSP
SENSE+
SENSE-
IN
VCC
VDD
N.C.
DH
LX
BST
DL
PGND
U4
MAX16821
EP
L1 15µH, 8A
LED+
R8 4.7Ω
C5 0.47µF
C8 2.2µF 10V
C10 OPEN
R9 0.004Ω
R18 OPEN
Q4 IRF6629
D2 B330A
Q6 OPEN
LED-
J9
J10
J11
J12
D3 B0530LW
Q8 OPEN
C15 0.0022µF
R17 2.2Ω
Q9 IRF6629
C14 0.47µF
R15 1Ω
R27 1Ω
R14 1kΩ
R22 1kΩ
LED CURRENT CONTROL
J6
C11 0.1µF
C12 0.1µF
C13 1µF
1.0V TO 2.75V VCONTROL
R10 26.1kΩ
0.113V
IN-
V-
OUT
V+
IN+
U1 LMX321
R11 1kΩ
R26 49.9kΩ
U3 TLV431
C17 1000pF
R13 4.99kΩ
C22 4.7µF
PWM INPUT
J7
R16 10kΩ
U2
MAX5048A
IN+
IN-
GND
V+
P_OUT
N_OUT
C16 4.7µF 6.3V
R19 1Ω
R20 1Ω
PWMN