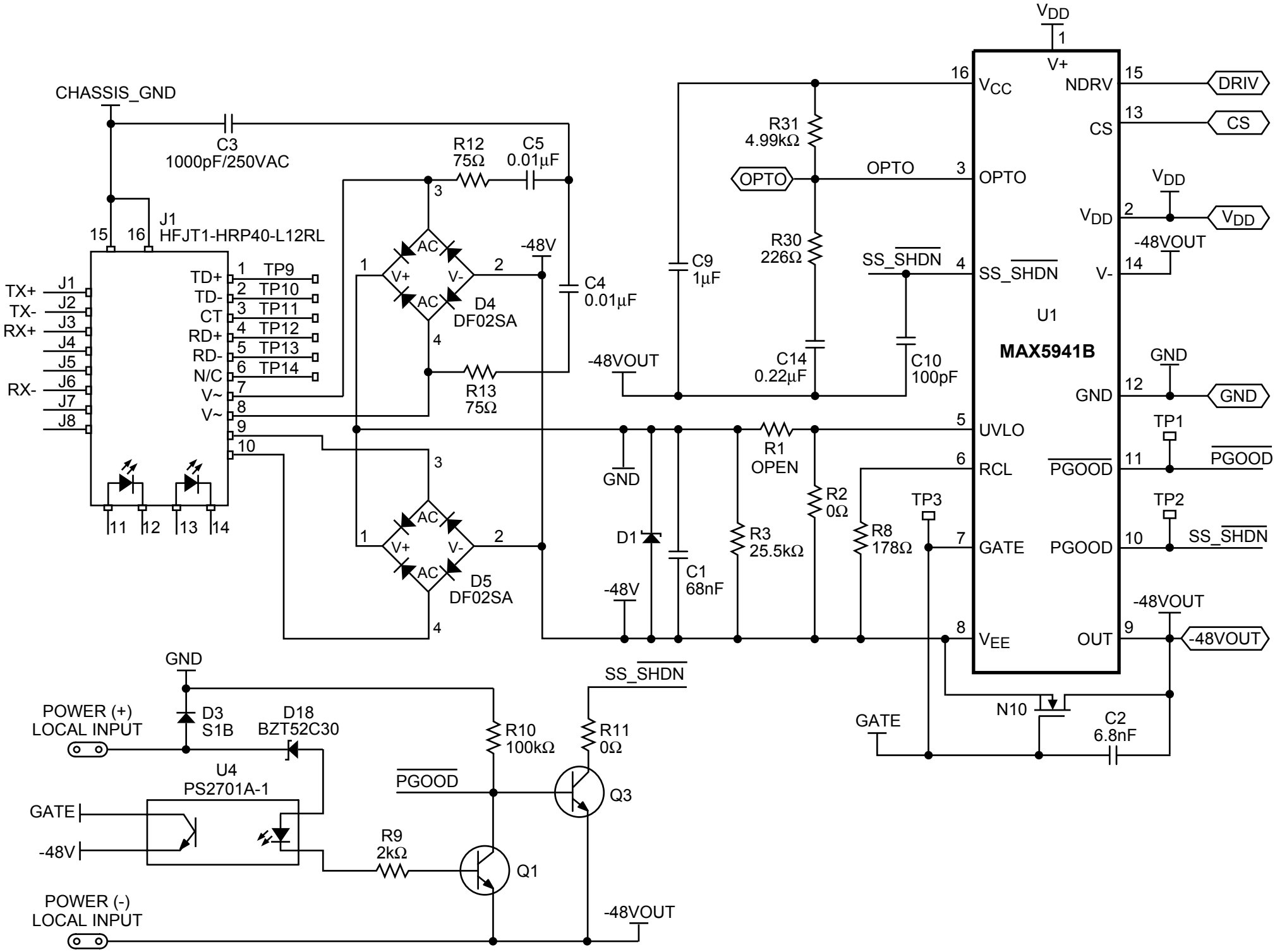
CHASSIS_GND
C3
1000pF/250VAC
J1
HFJT1-HRP40-L12RL
TX+
TX-
RX+
RX-
TD+
TD-
CT
RD+
RD-
N/C
V~
V~
TP9
TP10
TP11
TP12
TP13
TP14
R12
75Ω
C5
0.01µF
D4
DF02SA
R13
75Ω
C4
0.01µF
-48V
D5
DF02SA
GND
D1
C1
68nF
-48V
R1
OPEN
R2
0Ω
R3
25.5kΩ
R8
178Ω
TP3
C9
1µF
C14
0.22µF
C10
100pF
-48VOUT
R31
4.99kΩ
R30
226Ω
OPTO
SS_SHDN
U1
MAX5941B
VDD
VCC
V+
NDRV
CS
OPTO
VDD
V-
GND
UVLO
RCL
PGOOD
GATE
VEE
OUT
DRIV
CS
VDD
-48VOUT
GND
TP1
PGOOD
TP2
SS_SHDN
-48VOUT
N10
C2
6.8nF
GATE
POWER (+)
LOCAL INPUT
D3
S1B
D18
BZT52C30
U4
PS2701A-1
GATE
-48V
R9
2kΩ
Q1
R10
100kΩ
R11
0Ω
Q3
PGOOD
SS_SHDN
POWER (-)
LOCAL INPUT
-48VOUT