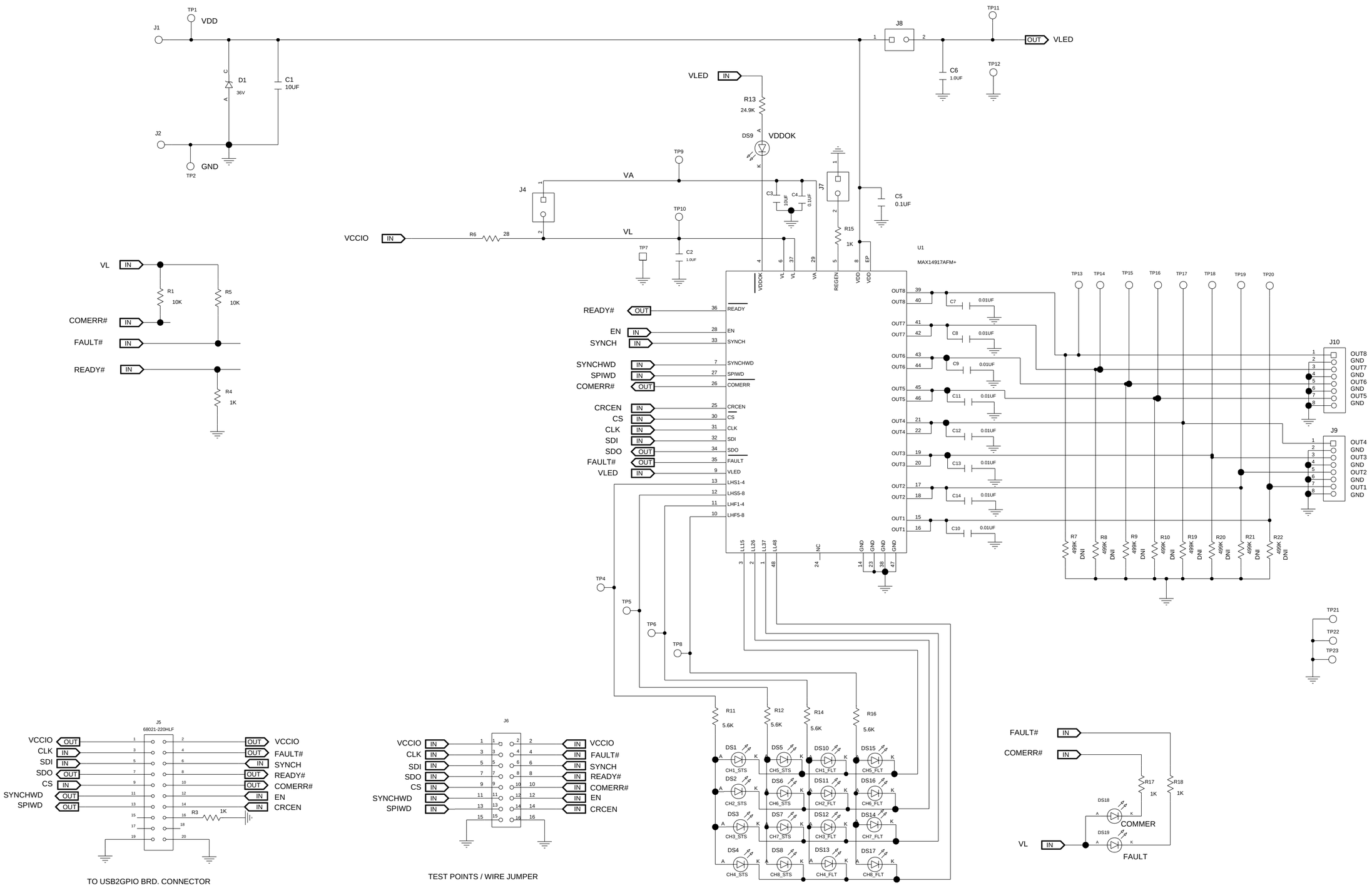


| | | |
|---|---|---|
| PROJECT TITLE: MAX14917_EVKIT_A | | |
| DRAWING TITLE: | | |
| SIZE: C | HARDWARE NUMBER: - | DATE: 09/18/20019 |
| ENGINEER: - | DRAWN BY: - | REV.: A |
| | TEMPLATE REV.: - | SHEET 1 OF <TOTAL_SHEETS> |