MAX17702

EE-Sim® OASIS Schematic Documentation

Design Requirements and Configuration

Pd-Acid Battery Specifications

Battery Capacity	84	Ah
No. of Series Cells	6	-
Battery Temperature Protection Enable	☑	
Minimum Operating Temperature	-20	°C
Maximum Operating Temperature	60	°C
Floating CV Voltage	13.5	V
Absorption CV Voltage	13.8	V
Temperature Compensation	-3	mV/°C/cell
Charging Resistance	22	mΩ
Deeply Discharge Battery Preconditioning Enable	☑	
Deep Discharge Voltage	11	V

Input Requirements

Minimum Input Voltage	19	V
Nominal Input Voltage	24	V
Maximum Input Voltage	60	V
Input Voltage Steady State Ripple	0.5	V

maxim integrated™

Design Requirements and Configuration (continued)

Output Requirements

Output Voltage	13.8	V
CC Mode Charging Current	10	A

Design Criteria

Switching Frequency	350	kHz
Ambient Temperature	25	°C
Input Short to Ground Protection	☑	
Absorption CV Timer Enable	☑	
Absorption CV Timer Timeout Setting	13	hrs

Default Schematic

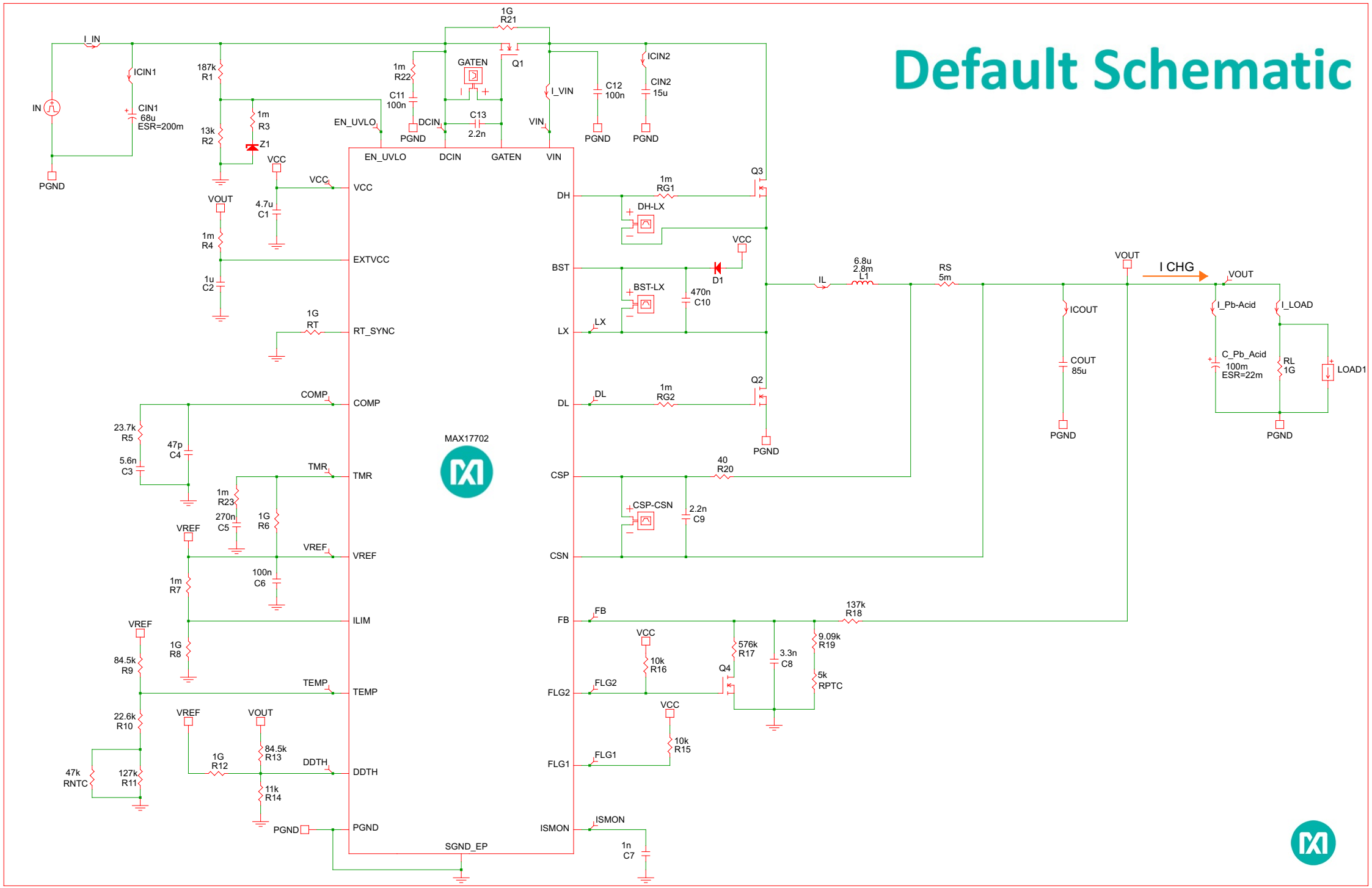

POP Schematic

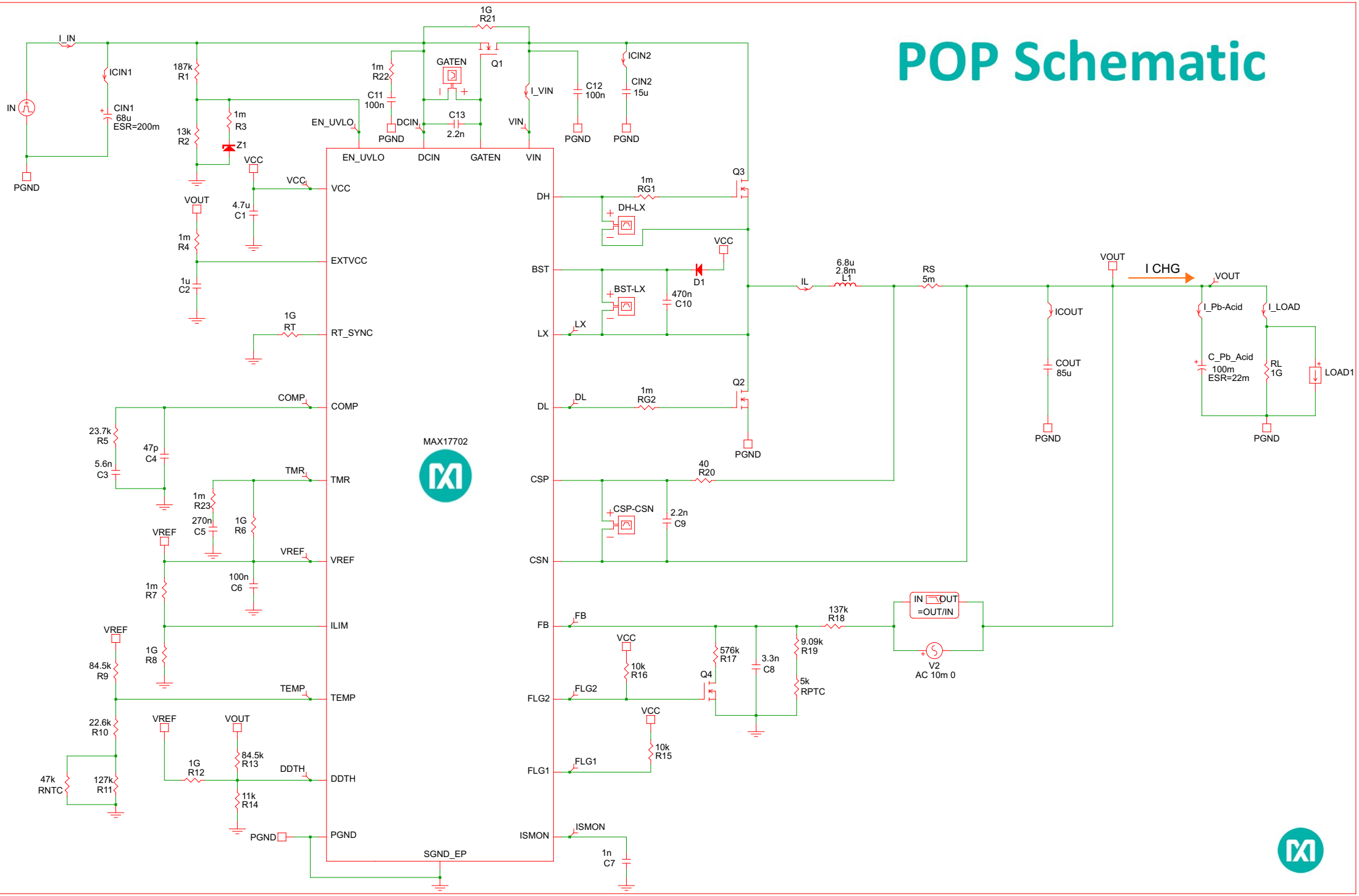

Switching Waveforms

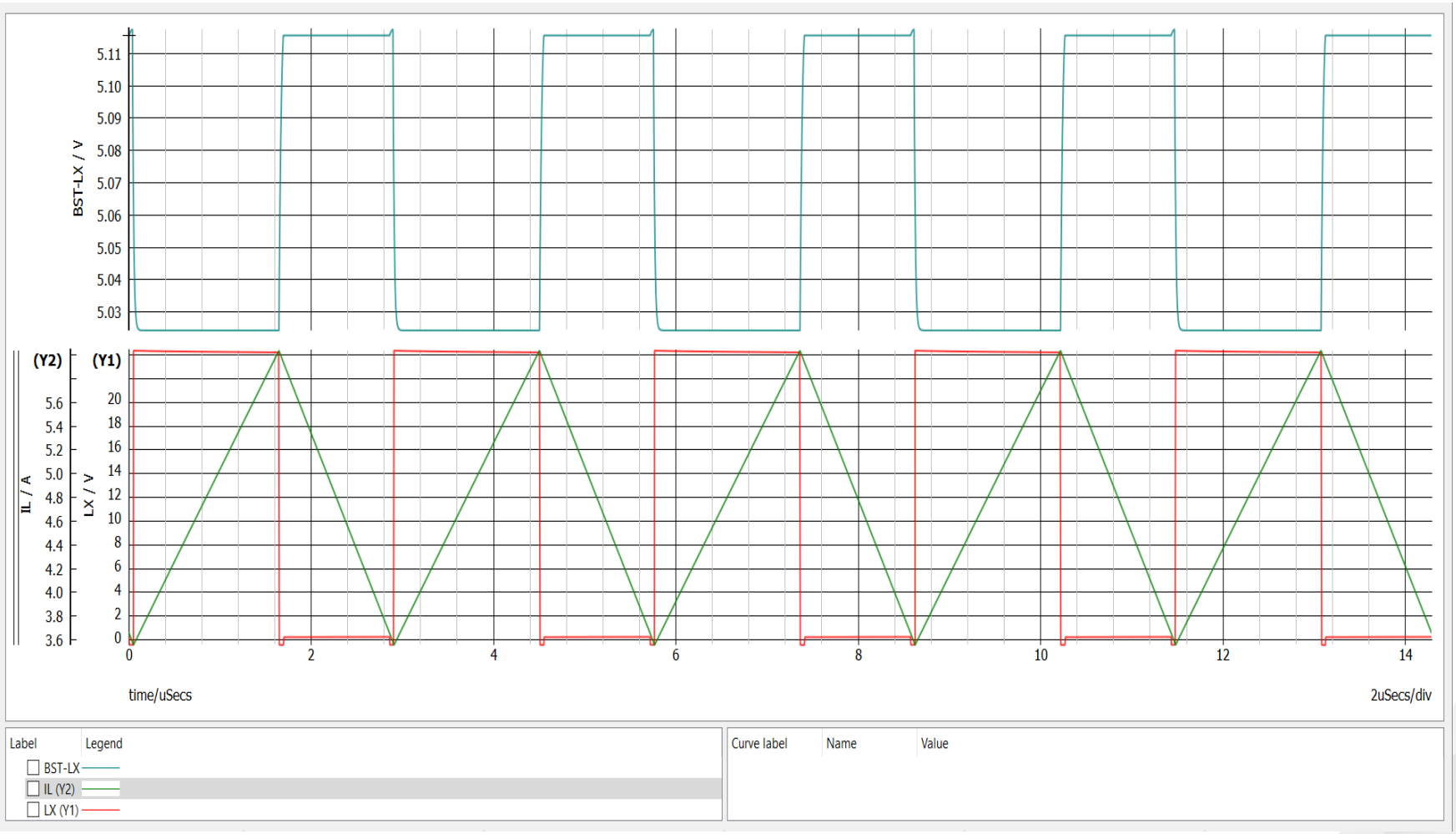

maxim integrated™

Bode Plot

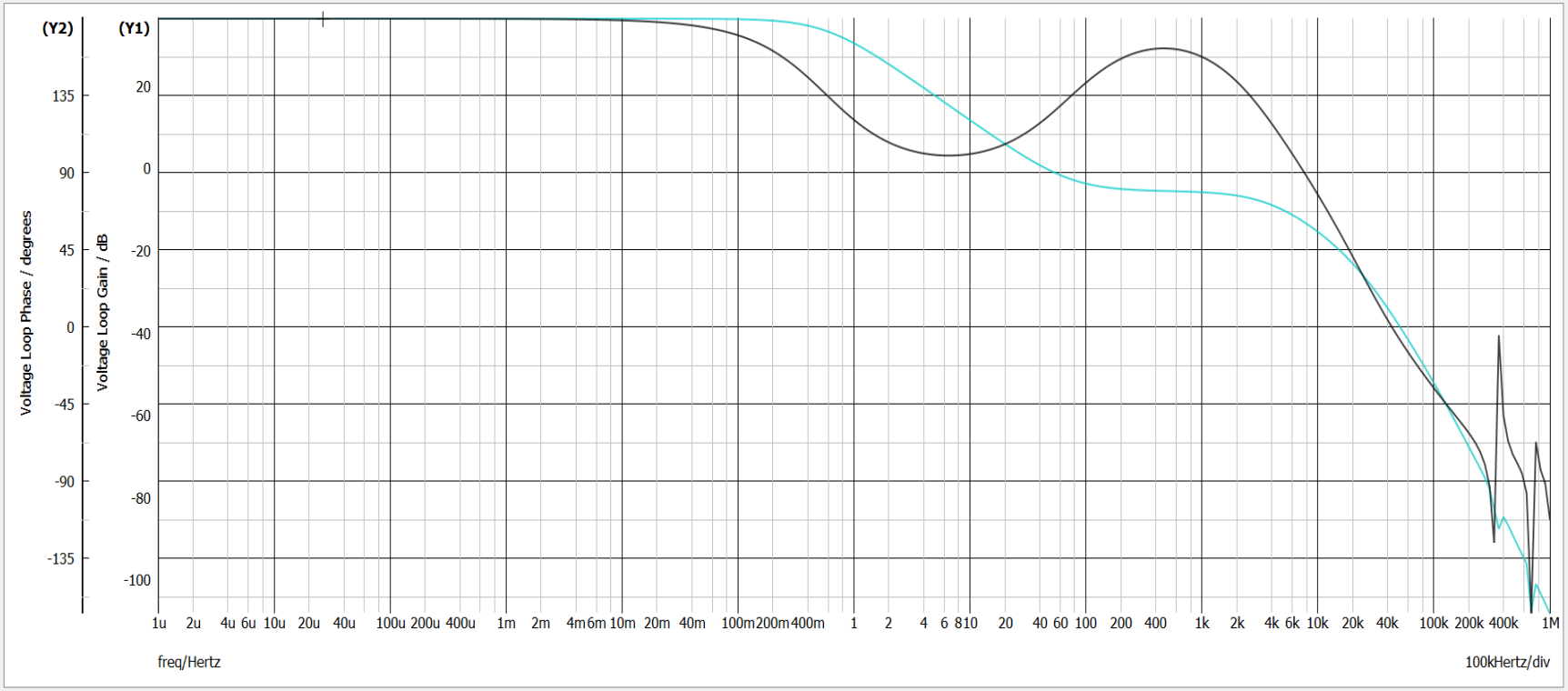

Label	Legend
Voltage Loop Gain (Y1)	
Voltage Loop Phase (Y2)	

Curve label	Name	Value
Voltage Loop Gain (Y1)	Gain Crossover Frequency	44.722517Hz
Voltage Loop Gain (Y1)	Gain Margin	35.582581dB
Voltage Loop Phase (Y2)	Phase Margin	121.69695degrees

maxim integrated™

Startup

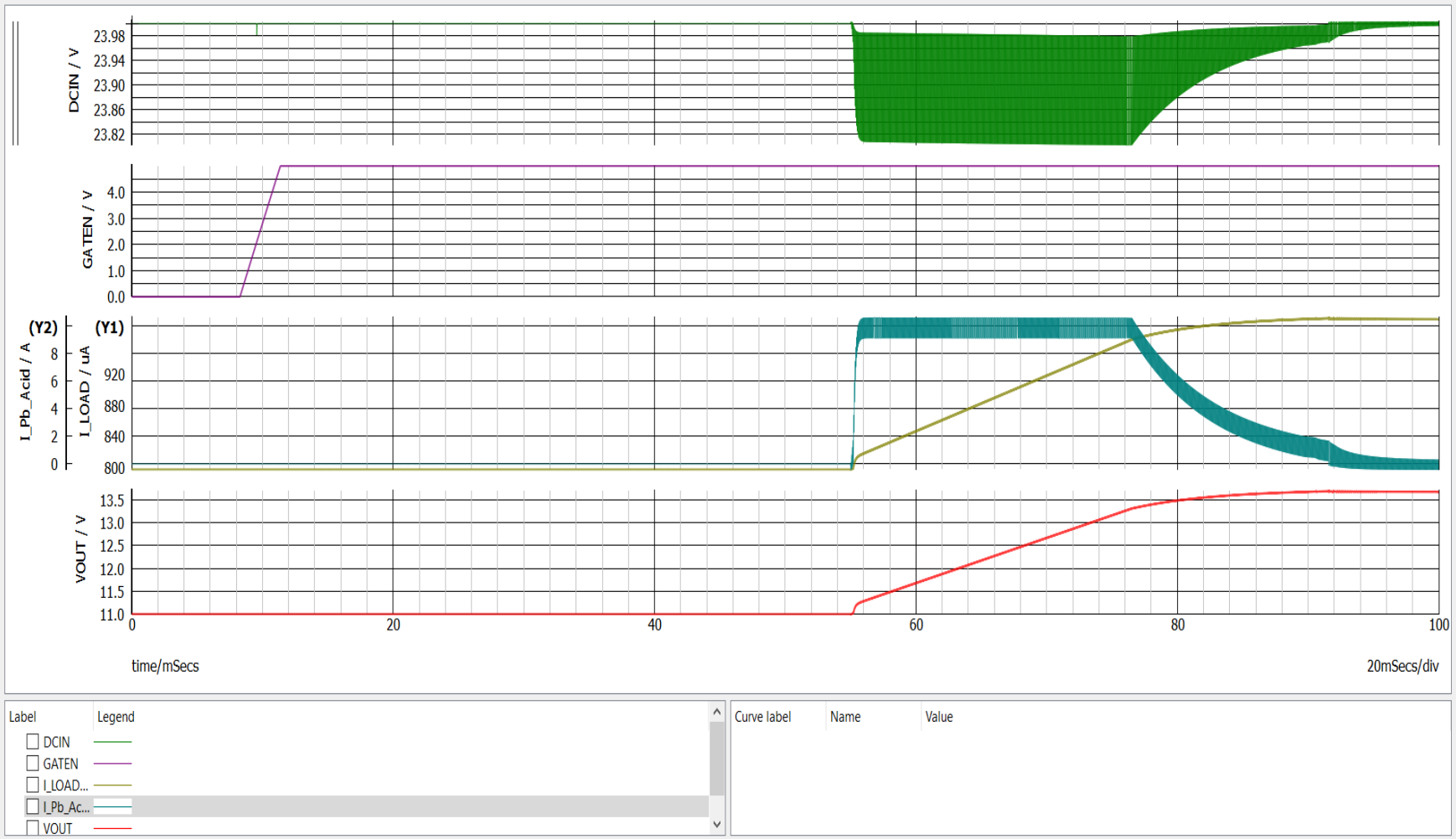
DCIN / V
23.98
23.94
23.90
23.86
23.82
GATEN / V
4.0
3.0
2.0
1.0
0.0
(Y2)
(Y1)
I_Pb_Acid / A
I_LOAD / uA
8
6
4
2
0
920
880
840
800
VOUT / V
13.5
13.0
12.5
12.0
11.5
11.0
0
20
40
60
80
100
time/mSecs
20mSecs/div
Label
Legend
DCIN
GATEN
I_LOAD...
I_Pb_Ac...
VOUT
Curve label
Name
Value