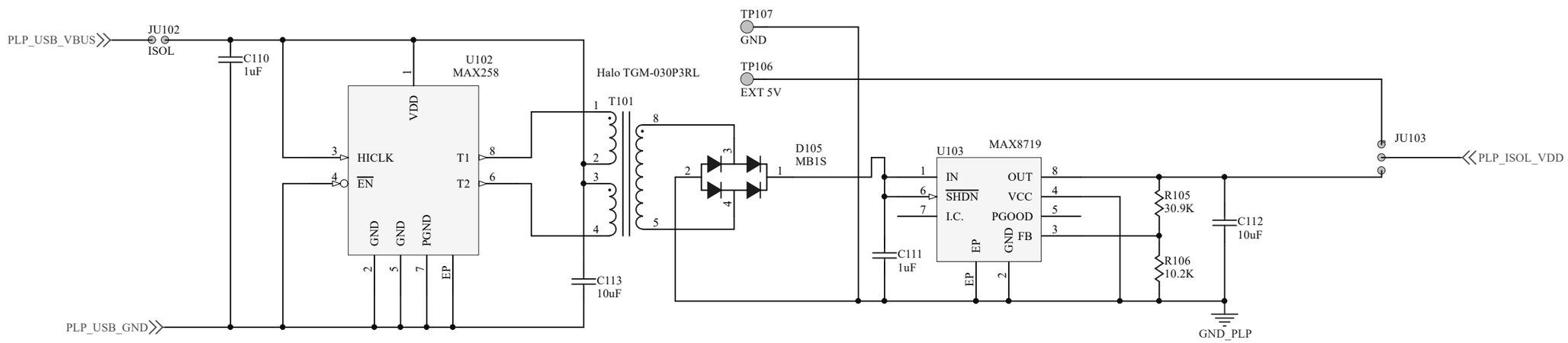
PLP_USB_VBUS
JU102
ISOL
C110
1uF
U102
MAX258
VDD
HICLK
EN
T1
T2
GND
GND
PGND
EP
Halo TGM-030P3RL
T101
C113
10uF
PLP_USB_GND
D105
MB1S
TP107
GND
TP106
EXT 5V
U103
MAX8719
IN
SHDN
I.C.
OUT
VCC
PGOOD
FB
EP
GND
C111
1uF
R105
30.9K
R106
10.2K
C112
10uF
GND_PLP
JU103
PLP_ISOL_VDD