# Troubleshooting the MAX77642 (1.8V/1.8V/5V Output) SMPS Circuit

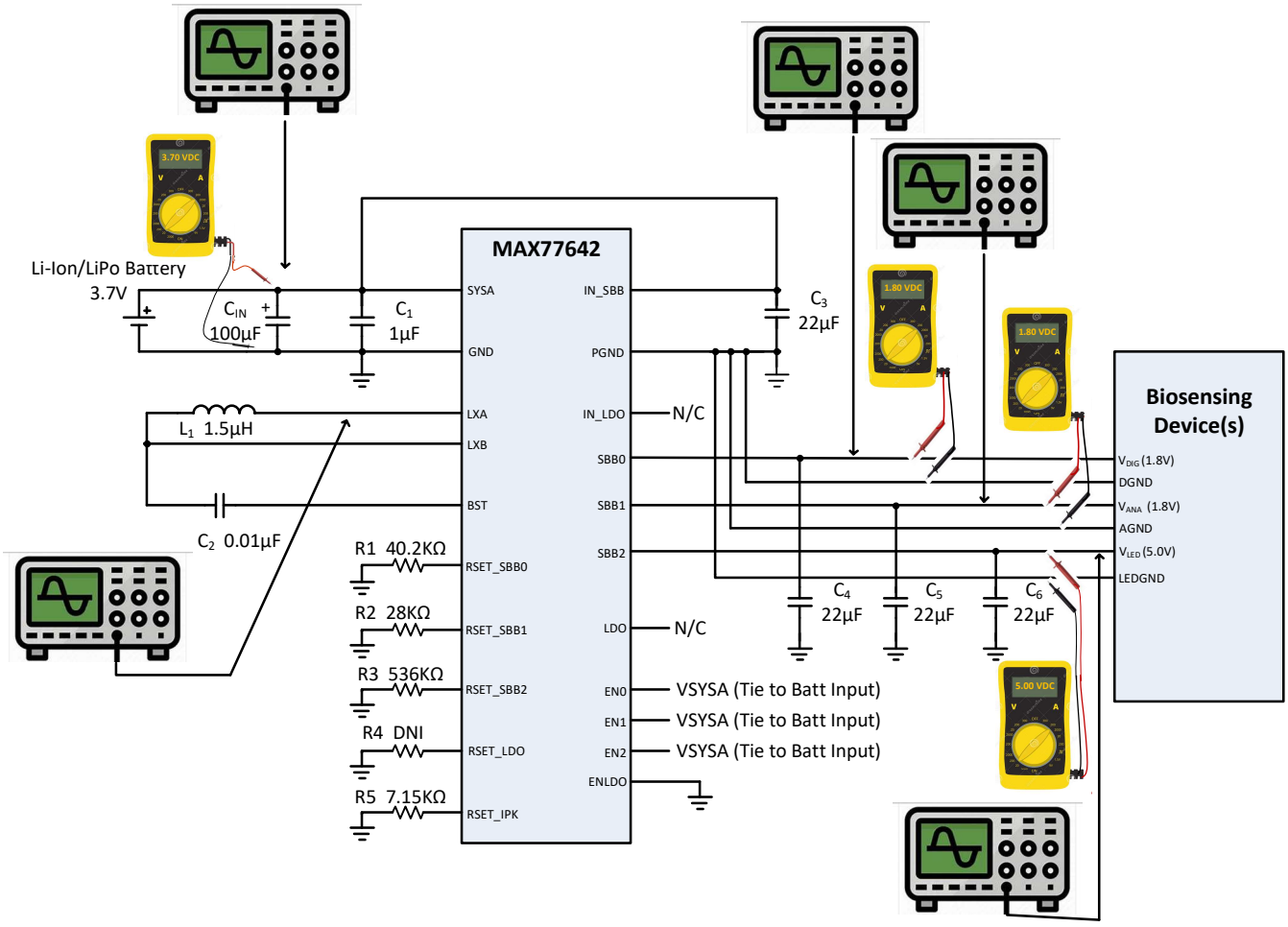


*Figure 1: Troubleshooting the MAX77642 SMPS Circuit*

## Troubleshooting the MAX77642 SMPS Circuit:

***Step 1 – Check the Input Voltage:*** Using a digital multimeter (DMM) with an internal impedance of a 1Mohm or larger (e.g., Fluke 87), measure the voltage across at the input to the MAX77642 device. Be sure to connect the negative "black" lead to ground and the positive "red" lead to the input "IN" pin of the device. If the input pin is not easily assessable, place the leads across the input capacitor, $C_{IN}$.

Use the following table to diagnose and fix associated problems:

| Input Voltage Reading | Potential Cause | Action | Notes |
|---|---|---|---|
| Zero Volts/No Reading | Battery uncharged. Battery defective. | Disconnect battery and check voltage. If it reads 0V, recharge battery. | Replace battery if it doesn't charge. |
| | No connection from battery (IN or GND line) | Disconnect battery and test for conductivity from battery connector to device input. | PCB may have an open. |
| | Input capacitor shorted to ground | Disconnect battery and check for continuity across capacitor. | PCB may have short. |
| Reading < 2.8V | Low battery charge Battery defective | Disconnect battery and check voltage. If it reads below 2.8V, recharge battery. | Replace battery if it does not charge. |
| 2.8V ≥ Reading ≤ 4.2V | | No action. | Operational. |
| Reading ≥ 4.2V | Defective battery | Replace battery. | |

***Step 2 – Check the Inductor Signal Waveform:*** Using an oscilloscope or digital storage scope (DSO), probe the LXA pin on the MAX77642 device. If the input pin is not easily assessable, place the probe on the (LXA) inductor end cap.

If the circuit is operating correcting, the waveform should be a series of pulse waves wave with minimal ringing on the rise and falling edges as shown in the following figure:

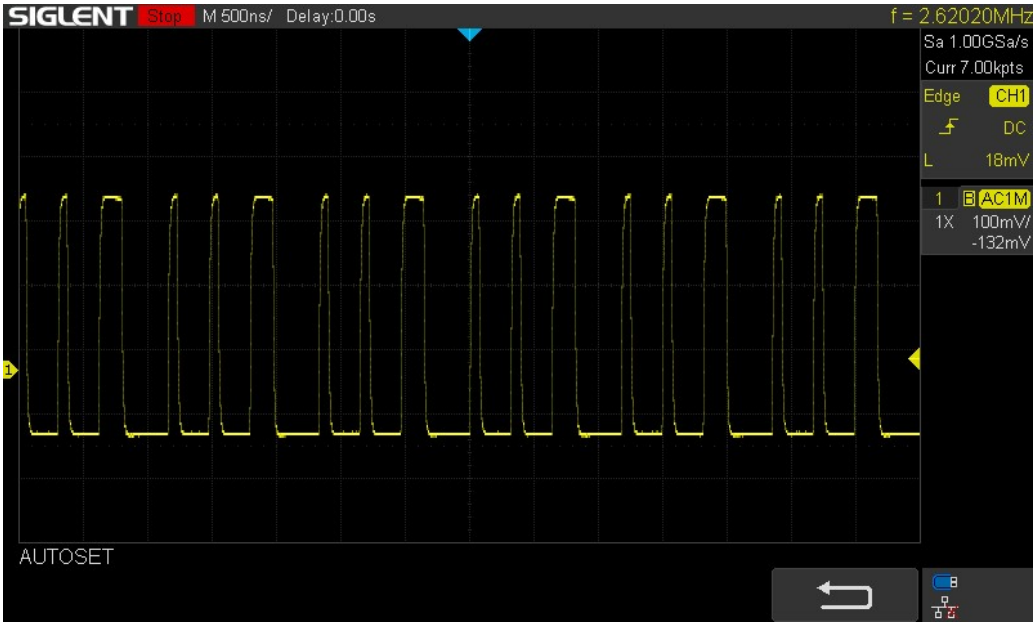


*Figure 2: Typical MAX77642 LXA Waveform (SSB0 & SSB1 Iout=1.2mA; SSB2 Iout= 126.1mA)*

The pulse waveforms demonstrate the time multiplexing of the of three switch-mode power supplies sharing a single inductor (A.K.A. SIMO Power Supply Device).

Deviations from the ideal series of pulse waves can be used to effectively diagnose and fix many problems.

Use the following table to diagnose and fix associated problems:

| **Input Waveform** | **Potential Cause** | **Action** | **Notes** |
|---|---|---|---|
| Amplitude is not correct | Inductor open.<br>IN pin open | Disconnect battery and check all connections with DMM. | Repair PCB if needed. |
| Duty Cycle is not correct (missing pulses) | | | |
| SSB0 Pulse Missing | EN0 shorted to GND | Check SSB0 Output for 0V. Disconnect battery and test for conductivity from EN0 Pin to GND. | PCB may have short. |
| SSB1 Pulse Missing | EN1 shorted to GND | Check SSB1 Output for 0V. Disconnect battery and test for conductivity from EN0 Pin to GND. | PCB may have short. |
| SSB2 Pulse Missing | EN2 shorted to GND | Check SSB2 Output for 0V. Disconnect battery and test for conductivity from EN0 Pin to GND. | PCB may have short. |

| | | | |
|---|---|---|---|
| Duty Cycle is not correct (Pulse Widths not correct) | Output Voltage Select Resistors; Defective device. | Identify SSBx channel associated with incorrect PW and follow associated steps below | |
| SSB0 PW Incorrect | RSET_SSB0 shorted to GND (SSB0 Vo=0.5V) | Disconnect battery and test for 40.2KΩ to GND. | Bad/wrong resistor. PCB may have short. |
| | RSET_SSB0 pin open (SSB0 Vo=5.2V) | Disconnect battery and test for conductivity from resistor to RSET_SSB0 pin. | PCB may have an open. Bad solder connection. |
| | Wrong RSET_SSB0 resistor value | Disconnect battery and test for 40.2KΩ to GND. | Bad/Wrong resistor installed. |
| SSB1 PW Incorrect | RSET_SSB1 shorted to GND (SSB1 Vo=0.5V) | Disconnect battery and test for 28KΩ to GND. | Bad (shorted) resistor. PCB may have short. |
| | RSET_SSB0 pin open (SSB1 Vo=5.2V) | Disconnect battery and test for conductivity from resistor to RSET_SSB1 pin. | PCB may have an open. Bad solder connection. |
| | Wrong RSET_SSB0 resistor value | Disconnect battery and test for 28KΩ to GND. | Bad/Wrong resistor installed. |
| SSB2 Pulse Missing | RSET_SSB2 shorted to GND (SSB2 Vo=0.5V) | Disconnect battery and test for 536KΩ to GND. | Bad (shorted) resistor. PCB may have short. |
| | RSET_SSB2 pin open (SSB2 Vo=5.5V) | Disconnect battery and test for conductivity from resistor to RSET_SSB2 pin. | PCB may have an open. Bad solder connection. |
| | Wrong RSET_SSB2 resistor value | Disconnect battery and test for 536KΩ to GND. | Bad/Wrong resistor installed. |
| Waveform distortion Rounded rising edge | Bad inductor connection | Re-connect inductor. Replace inductor. | Bad connection can cause higher line resistance |

***Step 3A – Check the Output DC Voltage:*** Using a digital multimeter (DMM) with an internal impedance of a 1Mohm or larger (e.g., Fluke 87), measure the voltage at the three outputs of the MAX77642 device. Be sure to connect the negative "black" lead to ground and the positive "red" lead to the associated SSBx channel output "OUT" pin of the device. If the output pin is not easily assessable, place the leads across the associated output capacitor, $C_{OUT}$.

Use the following table to diagnose and fix associated SSB0 (1.8VDC) output problems:

| **Output Voltage Reading** | **Potential Cause** | **Action** | **Notes** |
|---|---|---|---|
| SSB0: Zero Volts/No Reading | No connection from SSB0 to $C_{OUT}$ | Disconnect battery and test for conductivity from output to $C_{OUT}$ | PCB may have an open. |
| | Output capacitor shorted to ground | Disconnect battery and check for continuity across capacitor. | PCB may have short. |
| SSB0: Reading too low (< 1.71 VDC) | Inductor wrong value<br>Inductor saturated<br>RSET_SSB0 has wrong value | Disconnect battery and check for inductor and/or resistor values. | |
| 1.71V ≥Reading≤ 1.89V | | No action. | Operational. |
| Reading too high (> 1.89 VDC) | $R_{SEL}$ has wrong value | Disconnect battery and check $R_{SEL}$ value. | |

Use the following table to diagnose and fix associated SSB1 (1.8VDC) output problems:

| **Output Voltage Reading** | **Potential Cause** | **Action** | **Notes** |
|---|---|---|---|
| SSB1: Zero Volts/No Reading | No connection from SSB0 to $C_{OUT}$ | Disconnect battery and test for conductivity from output to $C_{OUT}$ | PCB may have an open. |
| | Output capacitor shorted to ground | Disconnect battery and check for continuity across capacitor. | PCB may have short. |
| SSB1: Reading too low (< 1.71 VDC) | Inductor wrong value<br>Inductor saturated<br>RSET_SSB1 has wrong value | Disconnect battery and check for inductor and/or resistor values. | |
| 1.71V ≥Reading≤ 1.89V | | No action. | Operational. |
| SSB1 Reading too high (> 1.89 VDC) | $R_{SEL}$ has wrong value | Disconnect battery and check $R_{SEL}$ value. | |

Use the following table to diagnose and fix associated SSB2 (5.0VDC) output problems:

| Output Voltage Reading | Potential Cause | Action | Notes |
|---|---|---|---|
| SSB2: Zero Volts/No Reading | No connection from SSB0 to $C_{OUT}$ | Disconnect battery and test for conductivity from output to $C_{OUT}$ | PCB may have an open. |
| | Output capacitor shorted to ground | Disconnect battery and check for continuity across capacitor. | PCB may have short. |
| SSB2: Reading too low (< 4.75 VDC) | Inductor wrong value<br>Inductor saturated<br>RSET_SSB2 has wrong value | Disconnect battery and check for inductor and/or resistor values. | |
| 4.75V ≥Reading≤ 5.25V | | No action. | Operational. |
| SSB1 Reading too high (> 5.259 VDC) | $R_{SEL}$ has wrong value | Disconnect battery and check $R_{SEL}$ value. | |

***Step 3B – Check the Output AC Voltage:*** Using an oscilloscope or digital storage scope (DSO), we will now measure the output ripple (AC) by probing the three outputs of the MAX77642 device. To properly measure the output, avoiding RF pickup, it is recommended that a differential technique be employed.

If the circuit is operating correctly, the SSB0 waveform should be a 1.8VDC (digital) output with a small ripple waveform superimposed on it. The ripple waveform should look like that shown in the following figure:

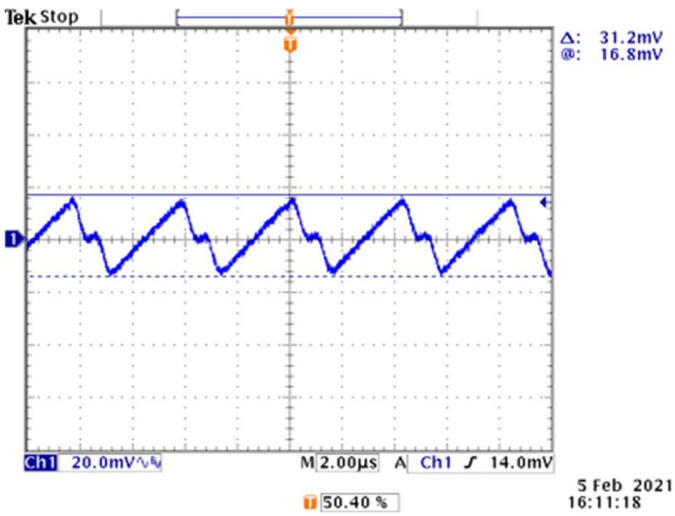


*Figure 3: MAX77642 SSB0 (Dig 1.8V) Ripple Waveform (Vin=4.2V, Iout=100mA)*

Use the following table to diagnose and fix associated problems:

| Input Waveform | Potential Cause | Action | Notes |
|---|---|---|---|
| Ripple amplitude is too high | Wrong capacitor value; defective capacitor | Disconnect battery and check all connections with DMM ; Measure capacitor value | |
| Broadband Noise is too high | Load too large; environmental noise. | Check load and environmental noise. | Use differential probing on output to reduce environmental noise. |
| Transition Spikes too high | Load inductance too large; Input current not adequate | Check line inductance; Check input current with scope. | |

If the circuit is operating correctly, the SSB1 waveform should be a 1.8VDC (analog) output with a small ripple waveform superimposed on it. The ripple waveform should look like that shown in the following figure:

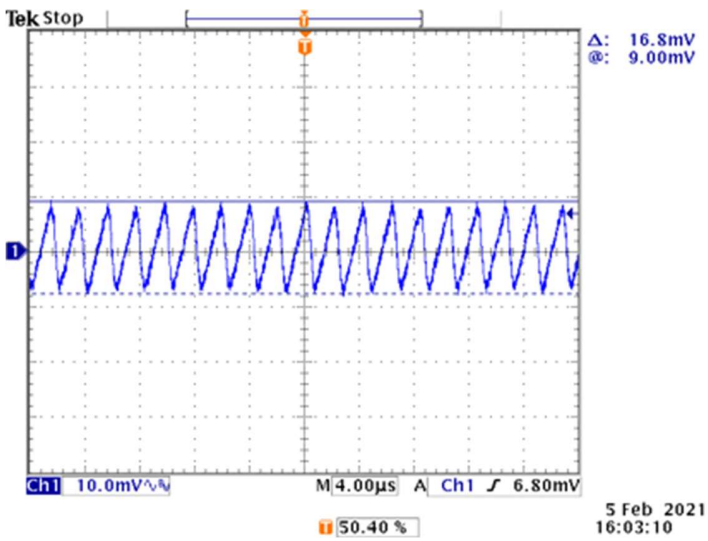


*Figure 1: MAX77642 SSB1 (Analog 1.8V) Ripple Waveform (Vin=4.2V, Iout=100mA)*

Use the following table to diagnose and fix associated problems:

| Input Waveform | Potential Cause | Action | Notes |
|---|---|---|---|
| Ripple amplitude is too high | Wrong capacitor value; defective capacitor | Disconnect battery and check all connections with DMM ; Measure capacitor value | |
| Broadband Noise is too high | Load too large; environmental noise. | Check load and environmental noise. | Use differential probing on output to reduce environmental noise. |
| Transition Spikes too high | Load inductance too large; Input current not adequate | Check line inductance; Check input current with scope. | |

If the circuit is operating correctly, the SSB2 waveform should be a 5.0VDC (for LEDs) output with a small ripple waveform superimposed on it. The ripple waveform should look like that shown in the following figure:

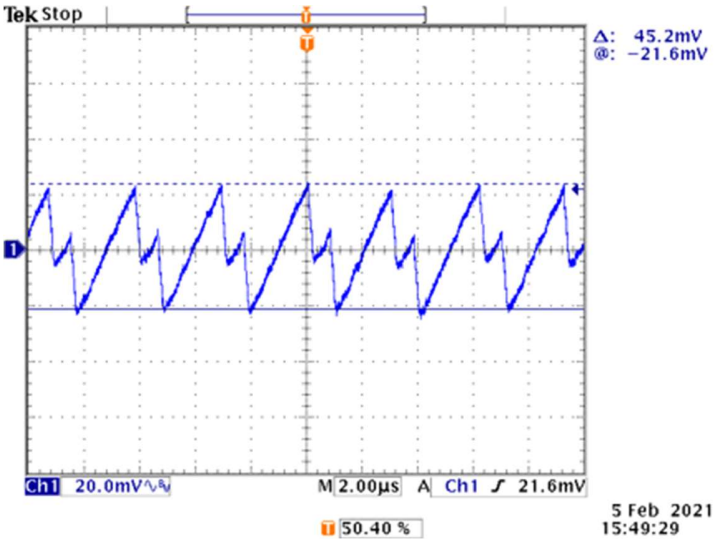


*Figure 5: MAX77642 SSB2 (5.0V) Ripple Waveform (Vin=4.2V, Iout=100mA)*

Use the following table to diagnose and fix associated problems:

| **Input Waveform** | **Potential Cause** | **Action** | **Notes** |
|---|---|---|---|
| Ripple amplitude is too high | Wrong capacitor value; defective capacitor | Disconnect battery and check all connections with DMM ; Measure capacitor value | |
| Broadband Noise is too high | Load too large; environmental noise. | Check load and environmental noise. | Use differential probing on output to reduce environmental noise. |
| Transition Spikes too high | Load inductance too large; Input current not adequate | Check line inductance; Check input current with scope. | |