Troubleshooting the MAX17220 (1.8V Output) SMPS Circuit

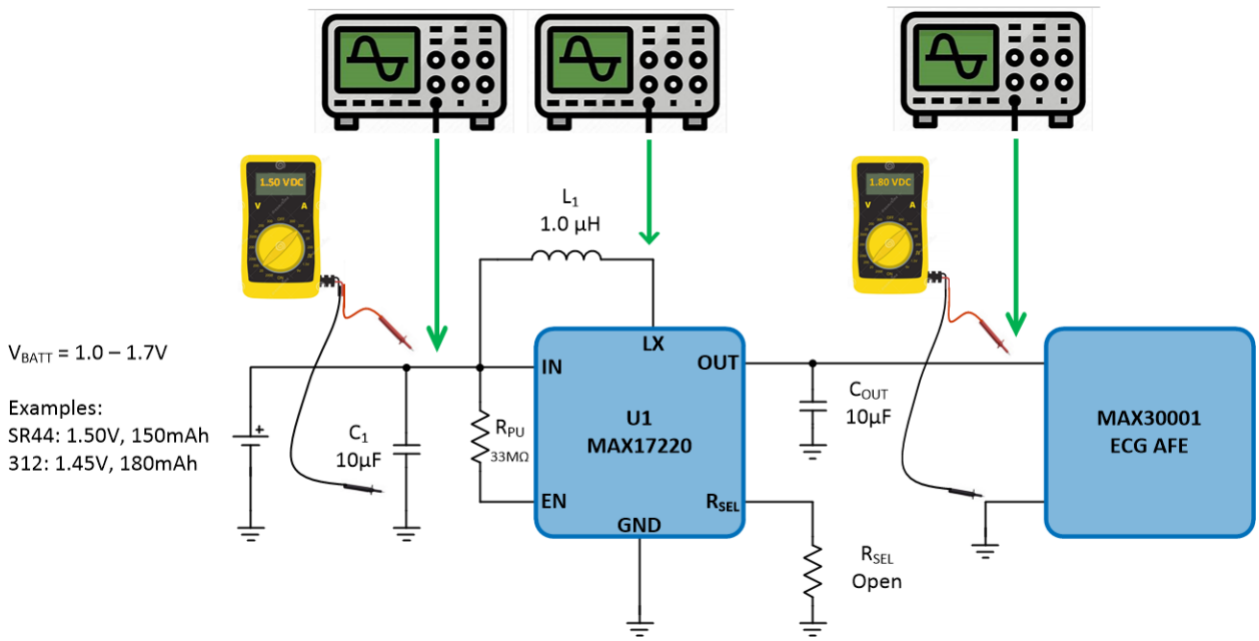

Figure 1. Troubleshooting the MAX17220 SMPS Circuit

Troubleshooting the MAX17220 SMPS Circuit:

Step 1 – Check the Input Voltage: Using a digital multimeter (DMM) with an internal impedance of a 1Mohm or larger (e.g., Fluke 87), measure the voltage across at the input to the MAX17220 device. Be sure to connect the negative "black" lead to ground and the positive "red" lead to the input "IN" pin of the device. If the input pin is not easily assessable, place the leads across the input capacitor, C_1.

Use the following table to diagnose and fix associated problems:

Input Voltage Reading	Potential Cause	Action	Notes
Zero Volts/No Reading	Battery uncharged. Battery defective.	Disconnect battery and check voltage. If it reads 0V, recharge battery.	Replace battery if it doesn't charge.
	No connection from battery (IN or GND line)	Disconnect battery and test for conductivity from battery connector to device input.	PCB may have an open.
	Input capacitor shorted to ground	Disconnect battery and check for continuity across capacitor.	Bad capacitor. PCB may have short.

	EN pin connected to ground	Disconnect battery and test for conductivity from EN pin to ground.	EN pin needs to be tied high for normal operation.
Zinc Air Battery: Reading < 1.2V Ag Oxide Battery: Reading < 1.3V	Low battery charge Battery defective	Disconnect battery and check voltage. If it reads below min V-Level, replace battery.	
Zinc Air Battery: 1.2V ≥ Reading ≤ 1.7V Ag Oxide Battery: 1.3V ≥ Reading ≤ 1.6V		No action.	Input voltage OK, proceed to step 2.
Zinc Air Battery: Reading ≥ 1.7V Ag Oxide Battery: Reading ≥ 1.6V	Defective battery	Replace battery and retest.	

Step 2 – Check the Inductor Signal Waveform: Using an oscilloscope or digital storage scope (DSO), probe the LX pin on the MAX17220 device. If the input pin is not easily assessable, place the probe on the inductor end cap.

If the circuit is operating correcting with a light load the waveform should appear as shown in the following figure:

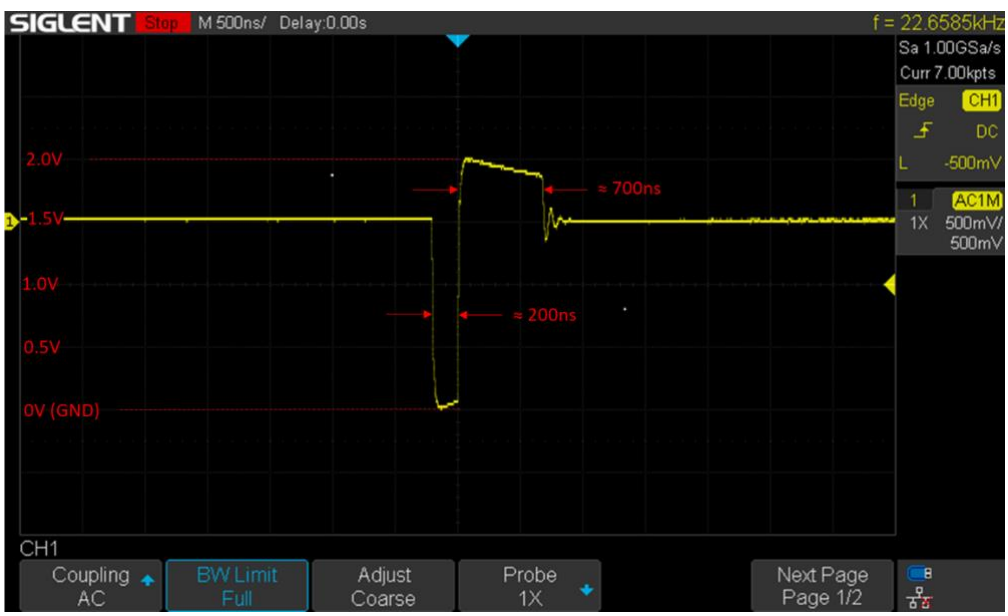

Figure 2. Typical MAX17220 V_{LX} Waveform with 2mA Load

As the MAX17220 employs pulse-frequency-modulation (PFM), the circuit will operate at higher repetition rates (i.e., higher frequency) under heavier loads with similar V_{LX} pulse waveforms. The figure below demonstrates this with a 45mA current load:

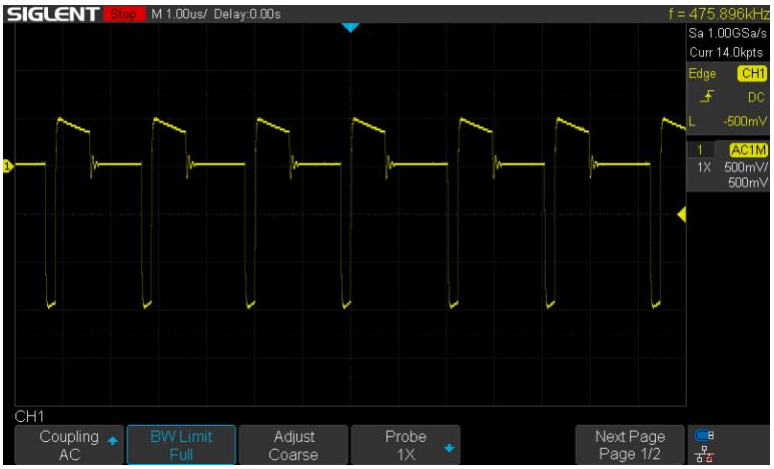

Figure 3. Typical MAX17220 V_{LX} Waveform with 45mA Load.

The typical V_{LX} peak-to-peak pulse amplitude should be approximately 2V. The frequency is proportional to the output load current. The figure below shows the relationship between the typical V_{LX} waveform frequency and output load current.

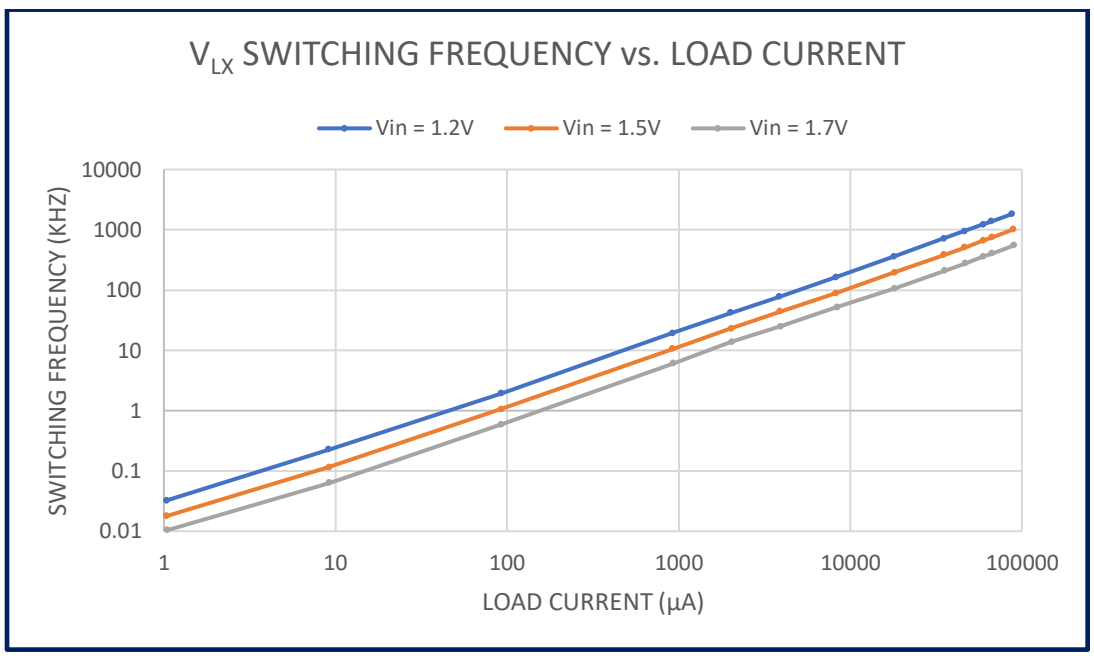

Figure 4. MAX17220 V_{LX} Frequency Vs. Load Current

Deviations from the frequency and/or pulse waveform shape can be used to effectively diagnose and fix many problems.

Use the following table to diagnose and fix associated problems:

Input Waveform	Potential Cause	Action	Notes
No pulses	Inductor open. C_{OUT} is open IN pin open	Disconnect battery and check all connections with DMM.	Repair PCB if needed.
Pulse amplitudes (Neg & Pos Pulses) are not correct	Inductor wrong value Inductor saturated C_{OUT} value is too low	Disconnect battery and check for inductor and output capacitor values.	Replace components as needed.
Frequency is not correct (Doesn't correlate to the output load)	Inductor wrong value Inductor saturated C_{OUT} value is too low R_{SEL} is not open	Disconnect battery and check for inductor, output capacitor values. Check that R_{SEL} is open	Replace components as needed.
Waveform distortion (Deviation from waveshape in Figure 2 & 3)	Inductor wrong value Inductor saturated Poor inductor connection C_{OUT} value is too low C_{IN} value too low	Disconnect battery and check for inductor and input & output capacitor values.	Bad connection can cause higher line resistance. Repair PCB if needed.

Step 3A – Check the Output DC Voltage: Using a digital multimeter (DMM) with an internal impedance of a 1Mohm or larger (e.g., Fluke 87), measure the voltage at the output of the MAX17220 device. Be sure to connect the negative "black" lead to ground and the positive "red" lead to the output "OUT" pin of the device. If the output pin is not easily assessable, place the leads across the output capacitor, C_{OUT}.

Use the following table to diagnose and fix associated problems:

Output Voltage Reading	Potential Cause	Action	Notes
Zero Volts/No Reading	No connection from SMPS to C_{OUT}	Disconnect battery and test for conductivity from output to C_{OUT}	PCB may have an open.
	Output capacitor shorted to ground	Disconnect battery and check for continuity across capacitor.	PCB may have short.
Reading too low (< 1.71 VDC)	Inductor wrong value Inductor saturated Battery voltage low	Disconnect battery and check for inductor and EN connection. Check battery.	
1.71V ≥ Reading ≤ 1.89		No action.	Operational.
Reading too high (> 1.89 VDC)	Inductor wrong value Inductor saturated R_{SEL} installed (should be open).	Disconnect battery and check for inductor and EN connection. Check battery.	Battery voltage too high (Go back to Step 1).

Step 3B – Check the Output AC Voltage: Using an oscilloscope or digital storage scope (DSO), we will now measure the output ripple (AC) by probing the OUT pin on the MAX17220 device. To properly measure the output, avoiding RF pickup, it is recommended that a differential technique be employed.

If the circuit is operating correctly, the waveform should be a 1.8VDC output with a small ripple waveform superimposed on it. The ripple waveform should resemble that shown in the following figure:

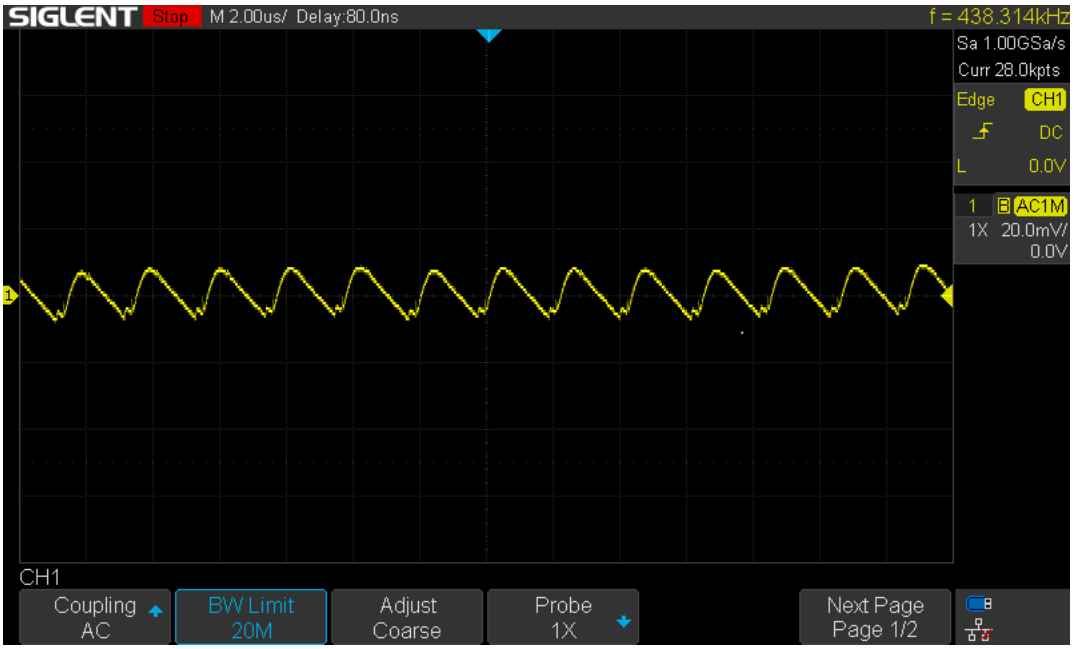

Figure 5. MAX17220 Output Ripple Waveform with 45mA Load Current

Use the following table to diagnose and fix associated problems:

Input Waveform	Potential Cause	Action	Notes
Ripple amplitude is too high (> 30mVpp)	C_{OUT} is too low. Defective output capacitor	Disconnect battery and check all connections with DMM ; Measure capacitor value	
Broadband Noise is too high	Load too large; environmental noise.	Check load and environmental noise.	Use differential probing on output to reduce environmental noise.
Transition Spikes too high (> 30mVp)	Load inductance, Input current not adequate	Check line inductance; Check input current with scope.	